This document is the absolute property of DOMAX Sp. z o.o. This document must not be copied without the written permission of DOMAX Sp. z o.o. The contents thereof must not be disclosed to a third party nor be used for any unauthorized purpose. Contravention will be prosecuted.

Revision				
Rev.	Explanation	Data	Revised by	Approved by

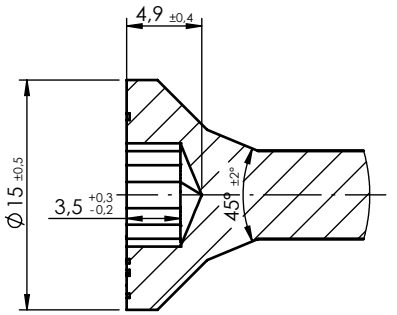

det.B

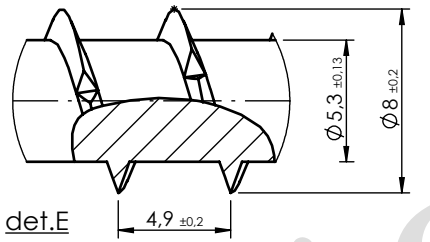

det.E

det. A

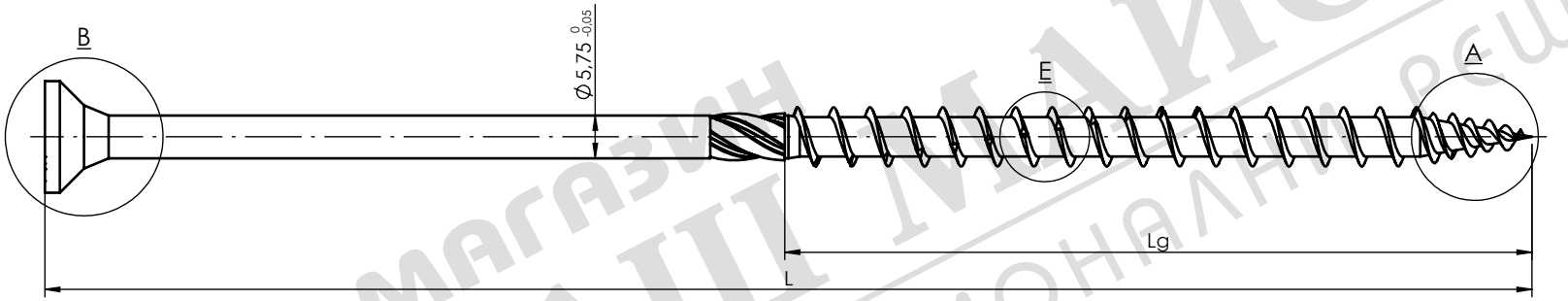

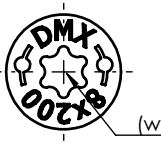

T40
(wg. ISO 10664)

Index	Name	L	Tolerance	Lg	Tolerance	Surface [dm2]	Weight [g]
310808	CS 8x80	80	± 2	50	± 2,5	0,21	17,7
	CS 8x90	90				0,23	19,8
310810	CS 8x100	100	±2,5	60	±3	0,26	21,7
310812	CS 8x120	120	±3	80	± 4	0,31	25,5
310814	CS 8x140	140	±3,5			0,35	29,6
310816	CS 8x160	160	±4			0,38	33,6
310818	CS 8x180	180	± 4,5	100	± 5	0,46	37,1
310820	CS 8x200	200	± 5			0,50	41,1
310822	CS 8x220	220	± 5,5			0,53	45,2
310824	CS 8x240	240	± 6			0,57	49,2
310826	CS 8x260	260	± 6,5			0,61	53,2
310828	CS 8x280	280	± 7			0,65	57,2
310830	CS 8x300	300	± 7,5			0,68	61,2
310832	CS 8x320	320	± 8			0,72	65,2
310834	CS 8x340	340	± 8,5			0,75	69,2
310836	CS 8x360	360	± 9			0,79	73,2
310838	CS 8x380	380	± 9,5			0,83	77,2
310840	CS 8x400	400	± 10			0,86	81,2

Note:
1. Tolerancje ogólne wg. EN 22768 mK.
2. Powłoka Fe/ZN 12c wg. EN ISO 2081

Design: D. Kozłowski	Checked: -		Approved: -		Note
Drawn: D.Kozłowski	Format: A4	Scale: 1:1	Material: Pręt Ø5,75 - 20MnB4	Weight: -	
Index	Date: 16.10.2023	Screw DMX CS 8			Sheet 1/1
domax DOMAX Sp. z o.o.		-			
		DMX CS 8			Rev E

магазин БАШ МАЙСТОРА профессиональные решения