TE-CB 18/180 Li Solo

D **Originalbetriebsanleitung**
Akku-Bläser

GB **Original operating instructions**
Cordless blower

F **Instructions d'origine**
Souffleur sans fil

I **Istruzioni per l'uso originali**
Soffiatore a batteria

DK/N **Original betjeningsvejledning**
Akku-blæser

S **Original-bruksanvisning**
Batteridriven blåsare

CZ **Originální návod k obsluze**
Akumulátorový foukač listí

SK **Originálny návod na obsluhu**
Akumulátorové dúchadlo

NL **Originele handleiding**
Accu-blazer

E **Manual de instrucciones original**
Soplador inalámbrico

RUS **Оригинальное руководство по эксплуатации**
Аккумуляторная воздуходувка

SLO **Originalna navodila za uporabo**
Akumulatorsko puhalo

H **Eredeti használati utasítás**
Akkus-fúvó

RO **Instrucțiuni de utilizare originale**
Suflantă cu acumulator

GR **Πρωτότυπες Οδηγίες χρήσης**
Φυσητήρας μπαταρίας

9

Art.-Nr.: 34.080.01 **I.-Nr.: 11017**

магазин БАШ МАЙСТОРА ПРОФЕСИОНАЛНИ РЕШЕНИЯ

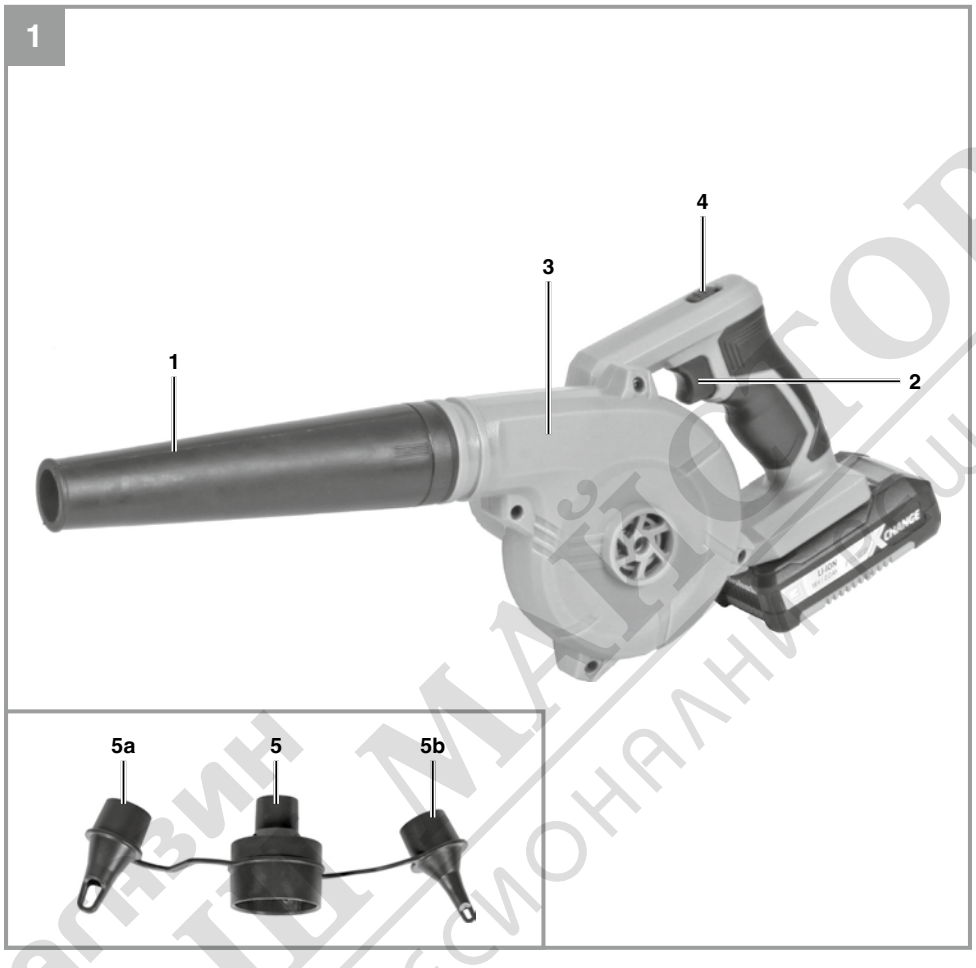

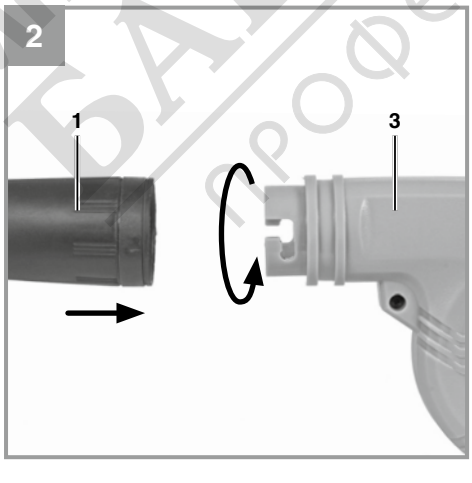

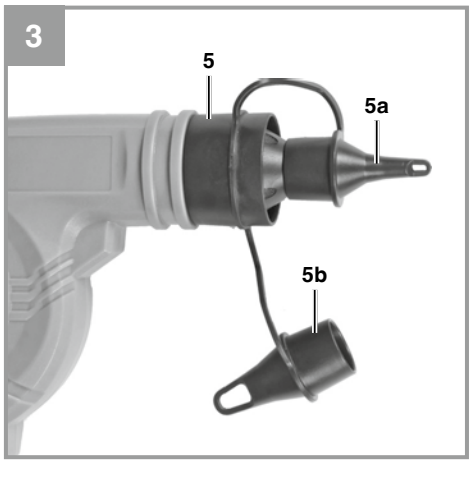

магазин БАШ МАЙСТОРА® професионални решения

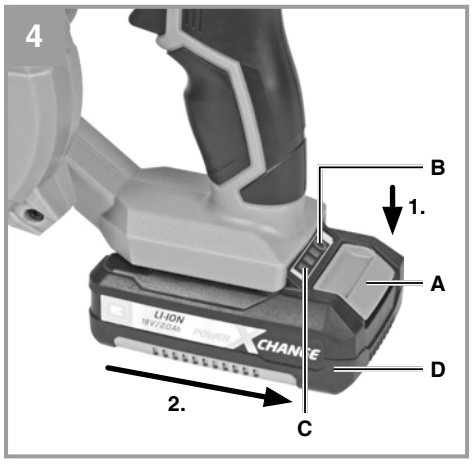

магазин БАШ МАЙСТОРА ПРОФЕСИОНАЛНИ РЕШЕНИЯ

Danger! - Read the operating instructions to reduce the risk of inquiry

Caution! Wear ear-muffs. The impact of noise can cause damage to hearing.

Caution! Wear a breathing mask. Dust which is injurious to health can be generated when working on wood and other materials. Never use the device to work on any materials containing asbestos!

Caution! Wear safety goggles. Sparks generated during working or splinters, chips and dust emitted by the device can cause loss of sight.

Store the battery only in dry rooms with an ambient temperature of +10°C to +40°C. Place only charged batteries in storage (charged at least 40%).

магазин БАШ МАЙСТОРА® ПРОФЕСИОНАЛНИ РЕШЕНИЯ

Danger!
When using the equipment, a few safety precautions must be observed to avoid injuries and damage. Please read the complete operating instructions and safety regulations with due care. Keep this manual in a safe place, so that the information is available at all times. If you give the equipment to any other person, hand over these operating instructions and safety regulations as well. We cannot accept any liability for damage or accidents which arise due to a failure to follow these instructions and the safety instructions.

1. Safety regulations

The corresponding safety information can be found in the enclosed booklet.
Danger!
Read all safety regulations and instructions.
Any errors made in following the safety regulations and instructions may result in an electric shock, fire and/or serious injury.
Keep all safety regulations and instructions in a safe place for future use.

2. Layout and items supplied

2.1 Layout (Fig. 1)
1. Blower tube
2. On/Off switch
3. Motor unit
4. Selector switch for 1st gear – 2nd gear
5. Attachable nozzles

2.2 Items supplied
Please check that the article is complete as specified in the scope of delivery. If parts are missing, please contact our service center or the sales outlet where you made your purchase at the latest within 5 working days after purchasing the product and upon presentation of a valid bill of purchase. Also, refer to the warranty table in the service information at the end of the operating instructions.

- Open the packaging and take out the equipment with care.
- Remove the packaging material and any packaging and/or transportation braces (if available).
- Check to see if all items are supplied.
- Inspect the equipment and accessories for transport damage.
- If possible, please keep the packaging until the end of the guarantee period.

Danger!
The equipment and packaging material are not toys. Do not let children play with plastic bags, foils or small parts. There is a danger of swallowing or suffocating!

- Cordless blower
- Blower tube
- Attachable nozzles
- Original operating instructions
- Safety information

3. Proper use

The cordless blower is designed for use in the workshed for removing dust and particles of dirt or making them into piles in areas which are hard to reach.
It can also be used for pumping air into objects such as air mattresses or similar using the attachable nozzles (5) included in delivery.

The equipment is to be used only for its prescribed purpose. Any other use is deemed to be a case of misuse. The user / operator and not the manufacturer will be liable for any damage or injuries of any kind caused as a result of this.

Please note that our equipment has not been designed for use in commercial, trade or industrial applications. Our warranty will be voided if the machine is used in commercial, trade or industrial businesses or for equivalent purposes.

4. Technical data

Motor power supply .....18 V d.c.
Idling speed I n_0 ..... 11,500 min^{-1}
Idling speed II n_0 .....15,500 min^{-1}
Air speed I ..... 130 kph
Air speed II.....180 kph
Weight .....1.0 kg

Danger!
Sound and vibration
Sound and vibration values were measured in accordance with EN 60745.

Anl_TE_CB_18_180_Li_Solo_SPK9.indb 16 12.12.2017 16:53:44

Sound pressure level L_{pA} ..... 78 dB
Uncertainty K_{pA} ..... 3 dB
Sound power level L_{WA} ..... 91 dB
Uncertainty K_{WA} ..... 3 dB

Wear ear-muffs.
The impact of noise can cause damage to hearing.

Total vibration values (vector sum of three directions) determined in accordance with EN 60745.

Vibration emission value a_h = 4.6 m/s²
Uncertainty K = 2.3 m/s²

The specified vibration value was established in accordance with a standardized testing method. It may change according to how the electric equipment is used and may exceed the specified value in exceptional circumstances.

The specified vibration value can be used to compare the equipment with other electric power tools.

The specified vibration value can be used for initial assessment of a harmful effect.

Keep the noise emissions and vibrations to a minimum.
- Only use appliances which are in perfect working order.
- Service and clean the appliance regularly.
- Adapt your working style to suit the appliance.
- Do not overload the appliance.
- Have the appliance serviced whenever necessary.
- Switch the appliance off when it is not in use.
- Wear protective gloves.

Caution!
Residual risks
Even if you use this electric power tool in accordance with instructions, certain residual risks cannot be rules out. The following hazards may arise in connection with the equipment's construction and layout:
1. Lung damage if no suitable protective dust mask is used.
2. Damage to hearing if no suitable ear protection is used.
3. Health damage caused by hand-arm vibrations if the equipment is used over a prolonged period or is not properly guided and maintained.

5. Before starting the equipment

Warning!
Always remove the battery pack before making adjustments to the equipment.

5.1 Fitting the blower tube (Fig. 2)
Connect the motor unit (3) and blower tube (1) together (Fig. 2).
To secure the blower tube, turn it clockwise until it clicks into position (Fig. 2).

5.2 Fitting the attachable nozzles (Fig. 3)
Fit the attachable nozzles (5) in the same way as the blower tube (1).
To do so, remove the blower tube (1) from the motor unit (3) and then fit the attachable nozzles (5).
You will have to use a different nozzle (5a or 5b) according to the type of valve.

5.3 Charging the Li battery pack (Fig. 4-5)
1. Remove the battery pack (D) from the handle, pressing the pushlock button (A) downwards to do so.
2. Check that your mains voltage is the same as that marked on the rating plate of the battery charger. Insert the power plug of the charger (E) into the mains socket outlet. The green LED will then begin to flash.
3. Push the battery pack (D) onto the battery charger (E).

In section 10 (Charger indicator) you will find a table with an explanation of the LED indicator on the charger.

If the battery pack fails to charge, check for the following:
- voltage at the power socket
- whether there is good contact at the charging contacts whether the charging unit is in place.

If the battery pack still fails to charge, send
- the charger and charging adapter
- and the battery pack

to our customer service center.

Anl_TE_CB_18_180_Li_Solo_SPK9.indb 17 12.12.2017 16:53:44

5.4 Battery capacity indicator (Fig. 4 /Item C)
Press the button for the battery capacity indicator (B). The battery capacity indicator (C) will indicate the charge status of the battery by means of 3 LEDs.

All 3 LEDs are lit:
The battery is fully charged.

2 or 1 LED(s) are lit:
The battery has an adequate remaining charge.

1 LED blinks:
The battery is empty, recharge the battery.

All LEDs blink:
The battery pack has undergone exhaustive discharge and is defective. Do not use or charge a defective battery pack.

6. Operation

6.1 On/Off switch (Fig. 1/Item 2)

Switching on:
To switch on, press and hold the On/Off switch (2).

Switching off:
Release the ON/OFF switch (2)

6.2 Speed control (Fig. 1)
The equipment has two speed settings. To select a speed, push the selector switch (4) into the desired position (1 or 2).
Note:
Activate the selector switch (4) only when the equipment is at a standstill.

7. Cleaning, maintenance and ordering spare parts

Hazard!
Always pull out the battery pack before starting any cleaning work.

7.1 Cleaning
- Keep all safety devices, air vents and the motor housing free of dirt and dust as far as possible. Wipe the equipment with a clean cloth or blow it with compressed air at low pressure.
- We recommend that you clean the device immediately each time you have finished using it.
- Clean the equipment regularly with a moist cloth and some soft soap. Do not use cleaning agents or solvents; these could attack the plastic parts of the equipment. Ensure that no water can seep into the device. The ingress of water into an electric tool increases the risk of an electric shock.

7.2 Maintenance
There are no parts inside the equipment which require additional maintenance.

7.3 Ordering replacement parts:
Please quote the following data when ordering replacement parts:
- Type of machine
- Article number of the machine
- Identification number of the machine
- Replacement part number of the part required

For our latest prices and information please go to www.isc-gmbh.info

8. Disposal and recycling

The equipment is supplied in packaging to prevent it from being damaged in transit. The raw materials in this packaging can be reused or recycled. The equipment and its accessories are made of various types of material, such as metal and plastic. Never place defective equipment in your household refuse. The equipment should be taken to a suitable collection center for proper disposal. If you do not know the whereabouts of such a collection point, you should ask in your local council offices.

9. Storage

Store the equipment and accessories in a dark and dry place at above freezing temperature. The ideal storage temperature is between 5 and 30 °C. Store the electric tool in its original packaging.

Anl_TE_CB_18_180_Li_Solo_SPK9.indb 18 12.12.2017 16:53:44

10. Charger indicator

Indicator status		Explanations and actions
Red LED	Green LED	
Off	Flashing	**Ready for use** The charger is connected to the mains and is ready for use; there is no battery pack in the charger
On	Off	**Charging** The charger is charging the battery pack in quick charge mode. The charging times are shown directly on the charger. Important! The actual charging times may vary slightly from the stated charging times depending on the existing battery charge.
Off	On	**The battery is charged and ready for use.** The unit then changes over to gentle charging mode until the battery is fully charged. To do this, leave the rechargeable battery on the charger for approx. 15 minutes longer. **Action:** Take the battery pack out of the charger. Disconnect the charger from the mains supply.
Flashing	Off	**Adapted charging** The charger is in gentle charging mode. For safety reasons the charging is performed less quickly and takes more than 1 hour. The reasons can be: - The battery pack has not been used for a very long time. - The battery pack temperature is outside the ideal range (between 25° C and 45° C). **Action:** Wait for the charging to be completed; you can still continue to charge the battery pack.
Flashing	Flashing	**Fault** Charging is no longer possible. The battery pack is defective. **Action:** Never charge a defective battery pack. Take the battery pack out of the charger.
On	On	**Temperature fault** The battery pack is too hot (e.g. due to direct sunshine) or too cold (below 0° C). **Action:** Remove the battery pack and keep it at room temperature (approx. 20° C) for one day .

МАГАЗИН БАШ МАЙСТОРА ПРОФЕСИОНАЛНИ РЕШЕНИЯ

For EU countries only

Never place any electric power tools in your household refuse.

To comply with European Directive 2012/19/EU concerning old electric and electronic equipment and its implementation in national laws, old electric power tools have to be separated from other waste and disposed of in an environment-friendly fashion, e.g. by taking to a recycling depot.

Recycling alternative to the return request:
As an alternative to returning the equipment to the manufacturer, the owner of the electrical equipment must make sure that the equipment is properly disposed of if he no longer wants to keep the equipment. The old equipment can be returned to a suitable collection point that will dispose of the equipment in accordance with the national recycling and waste disposal regulations. This does not apply to any accessories or aids without electrical components supplied with the old equipment.

The reprinting or reproduction by any other means, in whole or in part, of documentation and papers accompanying products is permitted only with the express consent of the iSC GmbH.

Subject to technical changes

магазин БАШ МАЙСТОРА® ПРОФЕСИОНАЛНИ РЕШЕНИЯ

Service information

We have competent service partners in all countries named on the guarantee certificate whose contact details can also be found on the guarantee certificate. These partners will help you with all service requests such as repairs, spare and wearing part orders or the purchase of consumables.

Please note that the following parts of this product are subject to normal or natural wear and that the following parts are therefore also required for use as consumables.

Category	Example
Wear parts*	Battery
Consumables*	
Missing parts	

* Not necessarily included in the scope of delivery!

In the effect of defects or faults, please register the problem on the internet at www.isc-gmbh.info. Please ensure that you provide a precise description of the problem and answer the following questions in all cases:

- Did the equipment work at all or was it defective from the beginning?
- Did you notice anything (symptom or defect) prior to the failure?
- What malfunction does the equipment have in your opinion (main symptom)? Describe this malfunction.

магазин БАШ МАЙСТОРА ® ПРОФЕСИОНАЛНИ РЕШЕНИЯ

Warranty certificate

Dear Customer,
All of our products undergo strict quality checks to ensure that they reach you in perfect condition. In the unlikely event that your device develops a fault, please contact our service department at the address shown on this guarantee card. You can also contact us by telephone using the service number shown. Please note the following terms under which guarantee claims can be made:

1. These guarantee terms apply to consumers only, i.e. natural persons intending to use this product neither for their commercial activities nor for any other self-employed activities. These warranty terms regulate additional warranty services, which the manufacturer mentioned below promises to buyers of its new products in addition to their statutory rights of guarantee. Your statutory guarantee claims are not affected by this guarantee. Our guarantee is free of charge to you.
2. The warranty services cover only defects due to material or manufacturing faults on a product which you have bought from the manufacturer mentioned below and are limited to either the rectification of said defects on the product or the replacement of the product, whichever we prefer.
   Please note that our devices are not designed for use in commercial, trade or professional applications. A guarantee contract will not be created if the device has been used by commercial, trade or industrial business or has been exposed to similar stresses during the guarantee period.
3. The following are not covered by our guarantee:
   - Damage to the device caused by a failure to follow the assembly instructions or due to incorrect installation, a failure to follow the operating instructions (for example connecting it to an incorrect mains voltage or current type) or a failure to follow the maintenance and safety instructions or by exposing the device to abnormal environmental conditions or by lack of care and maintenance.
   - Damage to the device caused by abuse or incorrect use (for example overloading the device or the use or unapproved tools or accessories), ingress of foreign bodies into the device (such as sand, stones or dust, transport damage), the use of force or damage caused by external forces (for example by dropping it).
   - Damage to the device or parts of the device caused by normal or natural wear or tear or by normal use of the device.
4. The guarantee is valid for a period of 24 months starting from the purchase date of the device. Guarantee claims should be submitted before the end of the guarantee period within two weeks of the defect being noticed. No guarantee claims will be accepted after the end of the guarantee period. The original guarantee period remains applicable to the device even if repairs are carried out or parts are replaced. In such cases, the work performed or parts fitted will not result in an extension of the guarantee period, and no new guarantee will become active for the work performed or parts fitted. This also applies if an on-site service is used.
5. To make a claim under the guarantee, please register the defective device at: www.isc-gmbh.info. Please keep your bill of purchase or other proof of purchase for the new device. Devices that are returned without proof of purchase or without a rating plate shall not be covered by the guarantee, because appropriate identification will not be possible. If the defect is covered by our guarantee, then the item in question will either be repaired immediately and returned to you or we will send you a new replacement.

Of course, we are also happy offer a chargeable repair service for any defects which are not covered by the scope of this guarantee or for units which are no longer covered. To take advantage of this service, please send the device to our service address.

Also refer to the restrictions of this warranty concerning wear parts, consumables and missing parts as set out in the service information in these operating instructions.

Anl_TE_CB_18_180_Li_Solo_SPK9.indb 22 12.12.2017 16:53:44