LIST NO. K891

ELECTRIC TOOL PARTS LIST

■ CORDLESS AUTO HAMMER

Model NH 18DSL

2018·8·27

(E1)

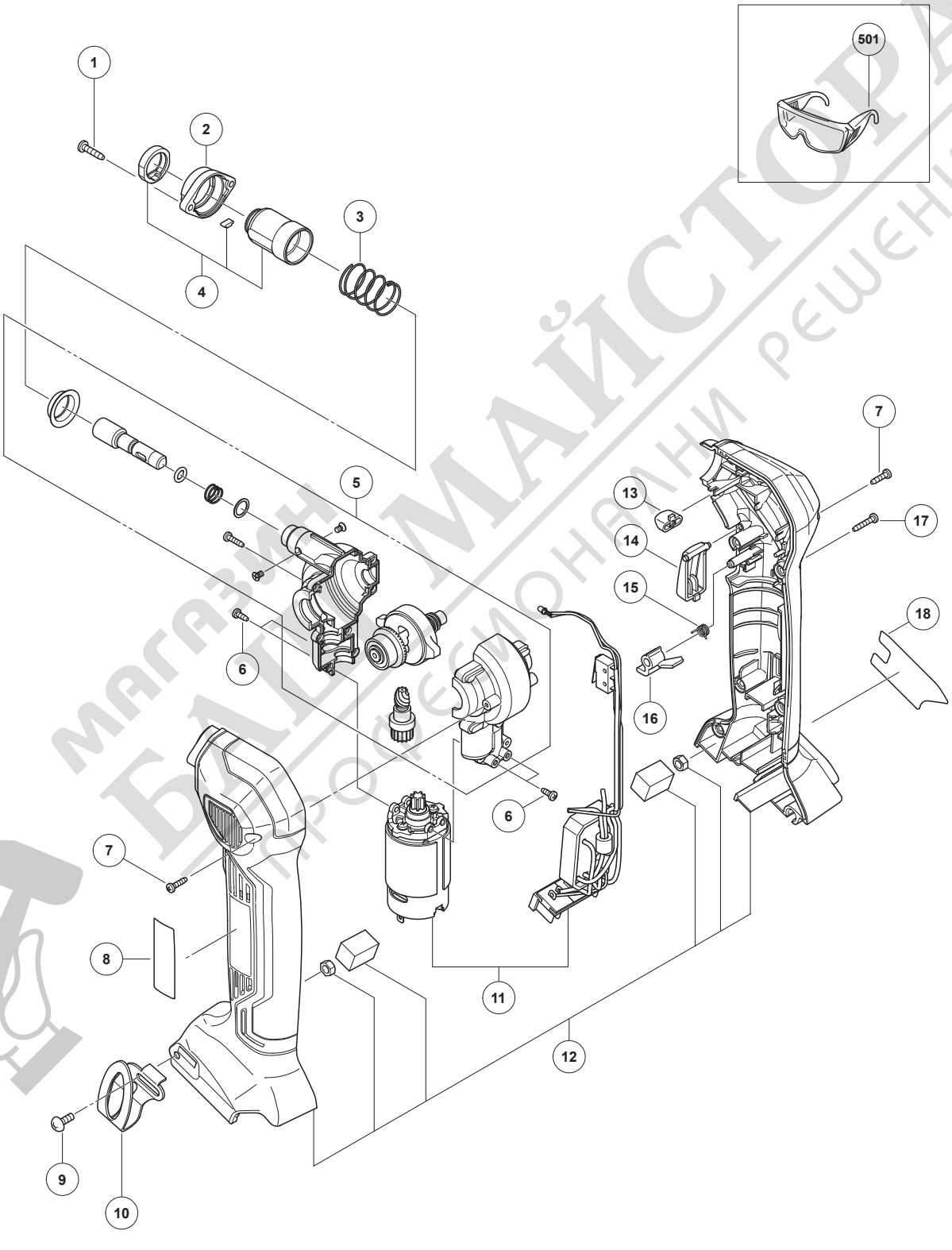

магазин БАЛКИ МАЙСТОРА професионални решения

Koki Holdings Co., Ltd.

PARTS

NH 18DSL

ITEM NO.	CODE NO.	DESCRIPTION	NO. USED	REMARKS	
1	373870	SCREW SET (B) (2 PCS.)	2		
2	373917	NAIL GUIDE SUPPORT	1		
3	373916	SPRING	1		
4	373867	NAIL GUIDE SET	1		
5	373866	GEAR CASE SET	1		
6	373871	SCREW SET (C) (4 PCS.)	4		
7	373869	SCREW SET (A) (2 PCS.)	2		
8		BRAND LABEL	1		
9	327001	TRUSS HD. SCREW M4 (BLACK)	1		
10	372229	HOOK	1		
11	373868	MOTOR SET	1		
12	373865	HOUSING SET	1		
13	373915	LED COVER	1		
14	373920	SWITCH TRIGGER	1		
15	373918	TORSION SPRING	1		
16	373919	PUSHING BUTTON	1		
17	373872	SCREW SET (D) (6 PCS.)	6		
18		NAME PLATE	1		

STANDARD ACCESSORIES

ITEM NO.	CODE NO.	DESCRIPTION	NO. USED	REMARKS	
501	875769	PROTECTIVE GLASSES	1		

OPTIONAL ACCESSORIES

ITEM NO.	CODE NO.	DESCRIPTION	NO. USED	REMARKS	
601	333352	BATTERY BSL 1815 (EUROPE)	1		

магазин БАШ МАЙСТОРА® професионални решения

*ALTERNATIVE PARTS

Printed in Japan 8 - 18
(180827N)