DEWALT®

XR LI-ION

МАГАЗИН БАШ МАЙСТОРА
ПРОФЕСИОНАЛНИ РЕШЕНИЯ

DCS578
DCS579

www.DEWALT.com

English ***(original instructions)*** 10

Русский *(перевод с оригинала инструкции)* 25

Українська *(переклад з оригінальної інструкції)* 46

МАГАЗИН БАШ МАЙСТОРА®
ПРОФЕСИОНАЛНИ РЕШЕНИЯ

Copyright DEWALT

Fig. A

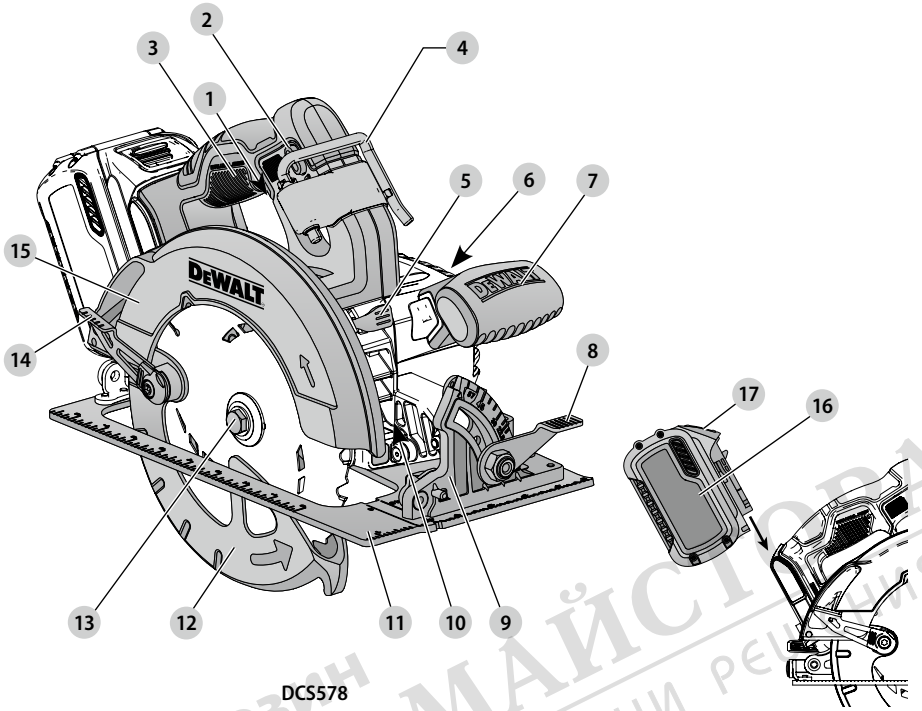

DCS578

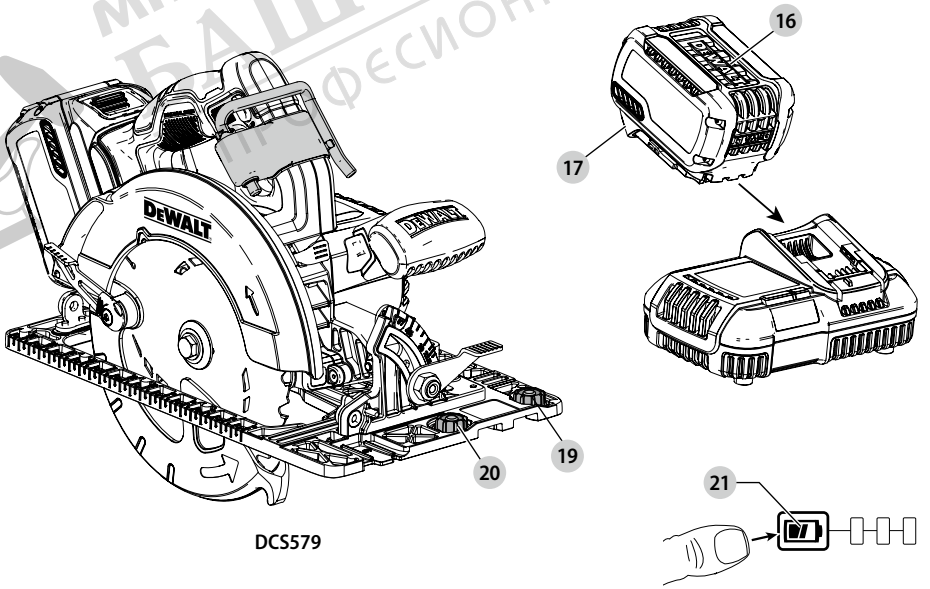

DCS579

МАГАЗИН БАШ МАЙСТОРА ПРОФЕСИОНАЛНИ РЕШЕНИЯ

Fig. B

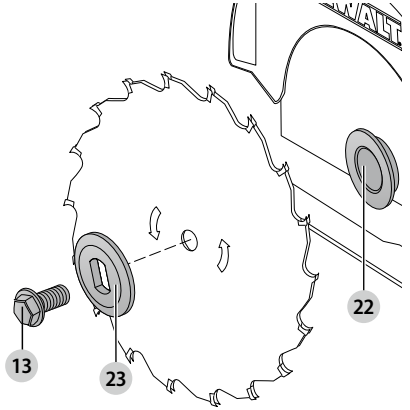

Fig. C

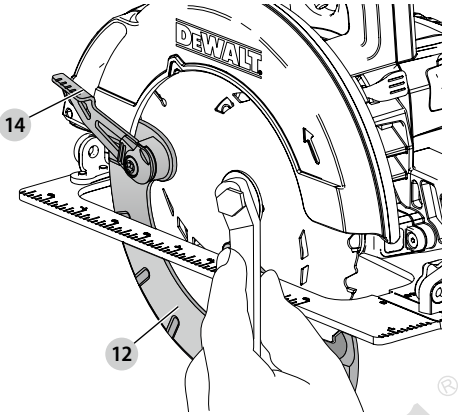

Fig. D

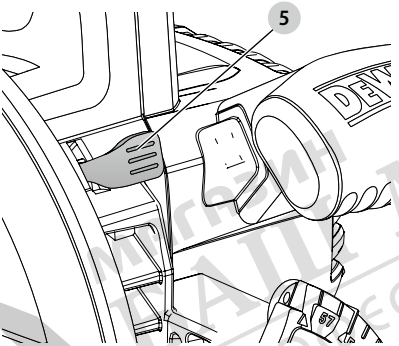

Fig. E

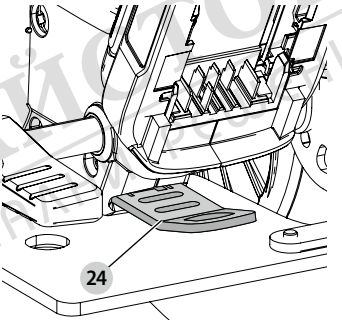

Fig. F

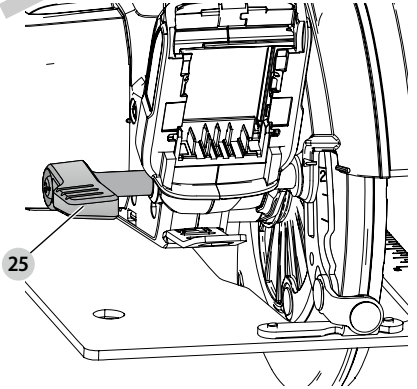

Fig. G

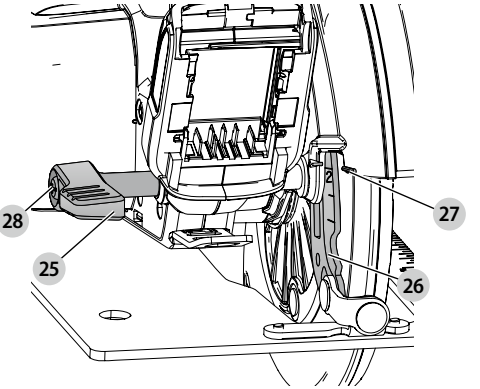

МАГАЗИН ПРОФЕССИОНАЛЬНОГО ИНСТРУМЕНТА ПАЛЫЧ МАЙСТОРА®

Fig. H

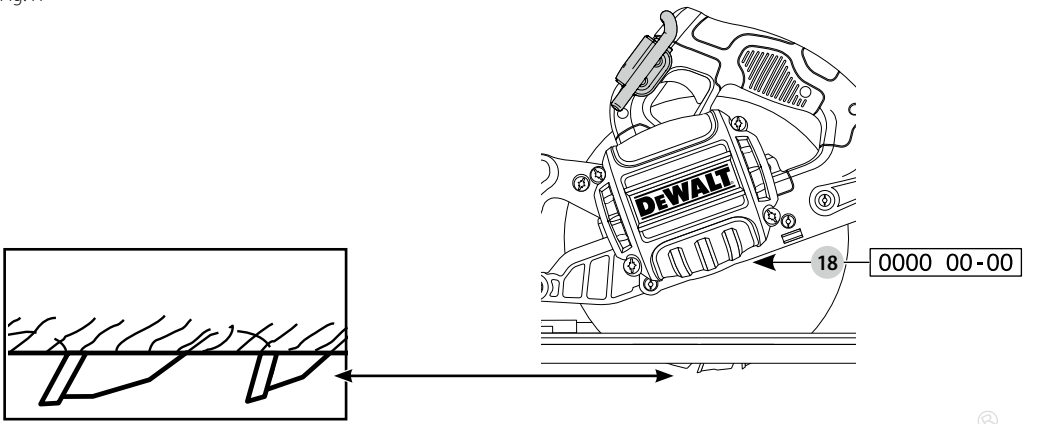

Fig. I

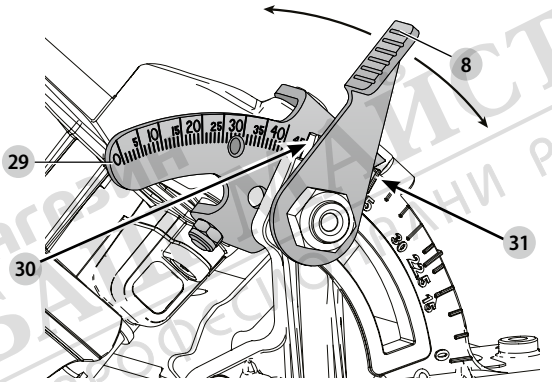

Fig. J

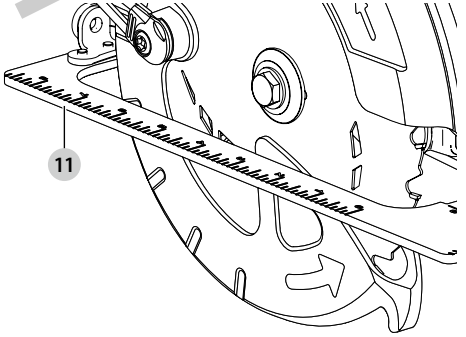

DCS578

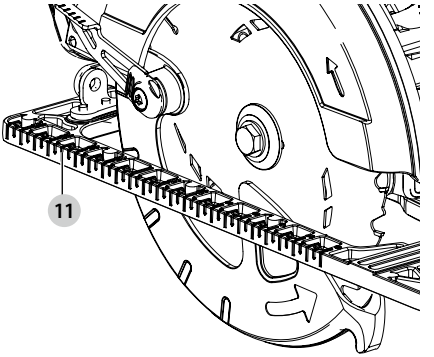

DCS579

МАГАЗИН БАЗА ТРАНЗИСТОРА®
ПРОФЕСИОНАЛНИ РЕШЕНИЯ

Fig. K

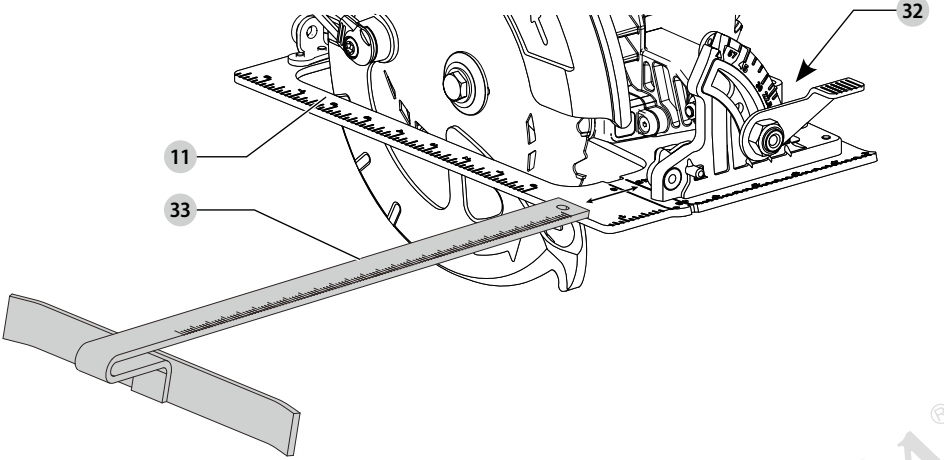

Fig. L

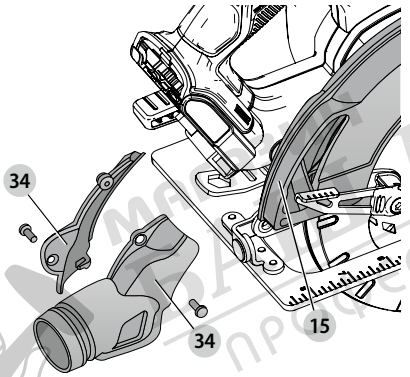

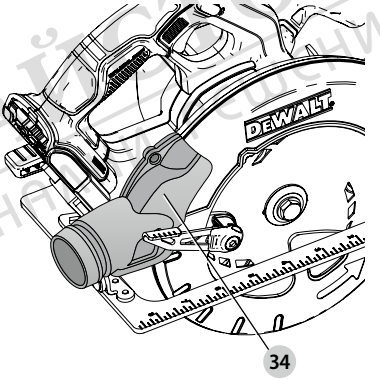

Fig. M

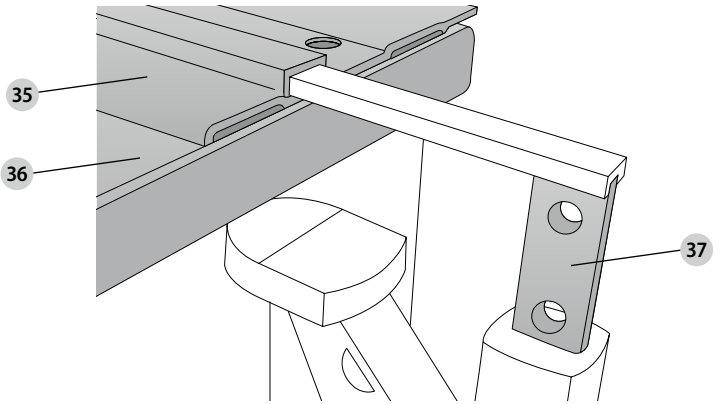

МАСТЕР МАЙСТОРА®
ПРОФЕССИОНАЛ ОБЕДИНЕНИЯ

Fig. N

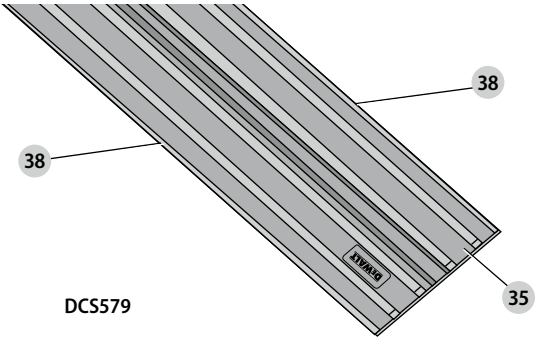

Fig. O

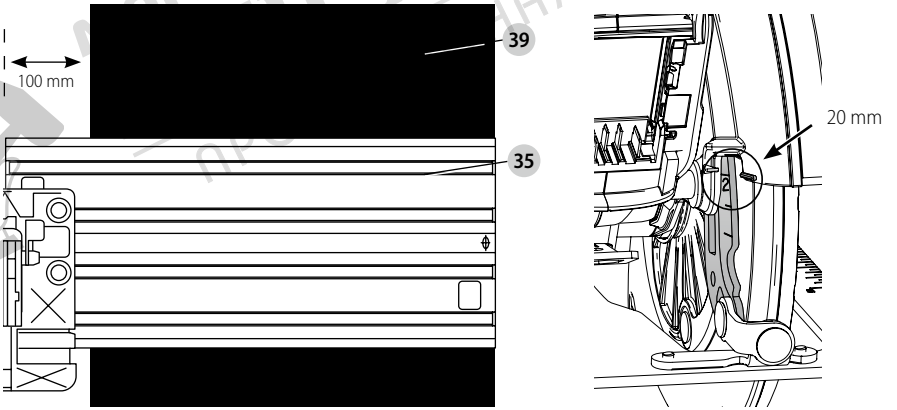

МАГАЗИН МАЙСТОРА®
ПРОФЕСИОНАЛНИ РЕШЕНИЯ

Fig. P

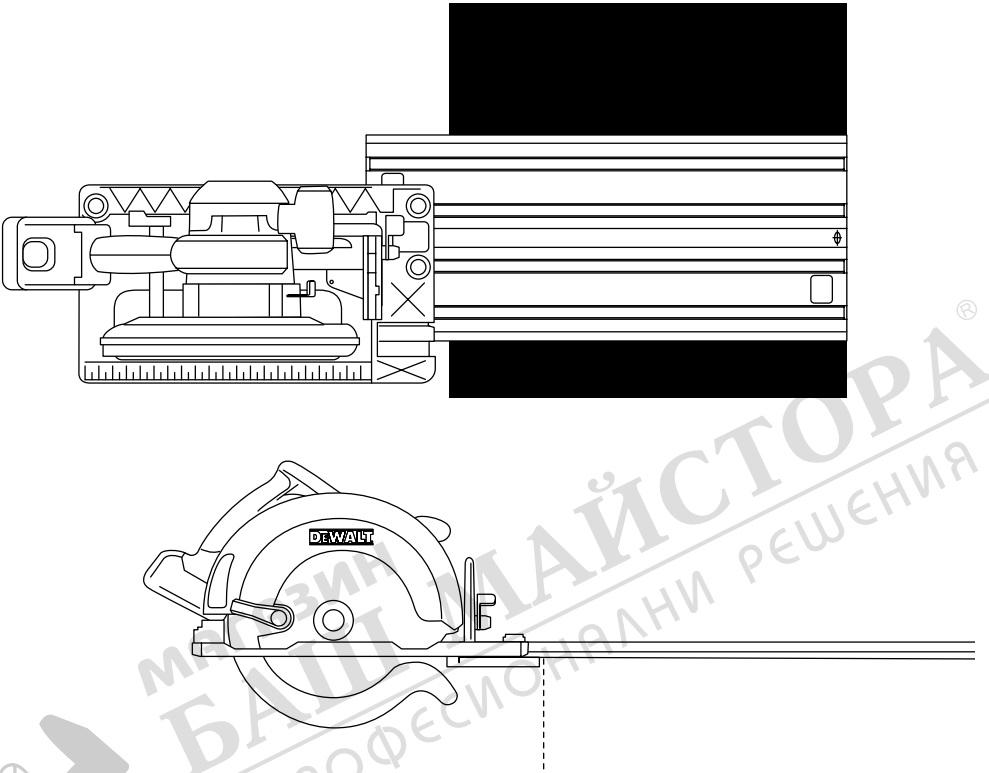

Fig. Q

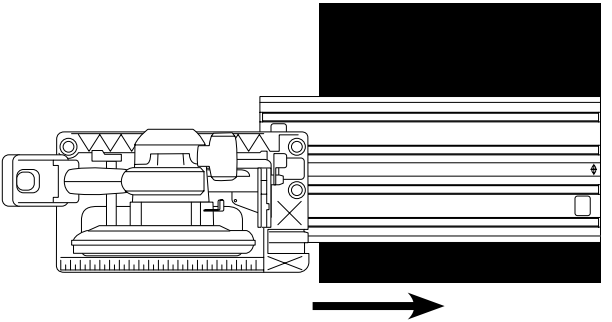

МАГАЗИН БАЩА МАЙСТОРА® ПРОФЕСИОНАЛНИ РЕШЕНИЯ

Fig. R

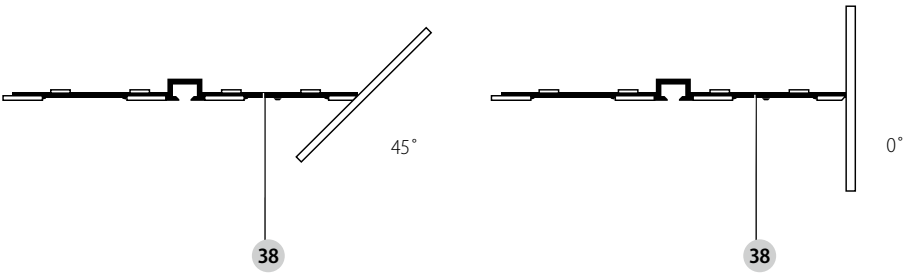

Fig. S

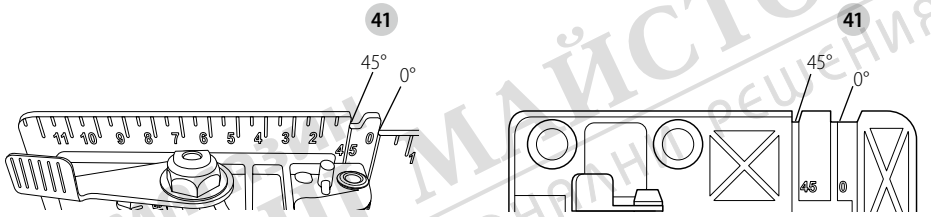

DCS578 DCS579

МАГАЗИН БАШ МАЙСТОРА ®
ПРОФЕСИОНАЛНО РЕШЕНИЯ

Fig. T

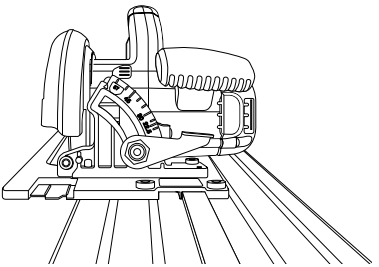

Fig. U

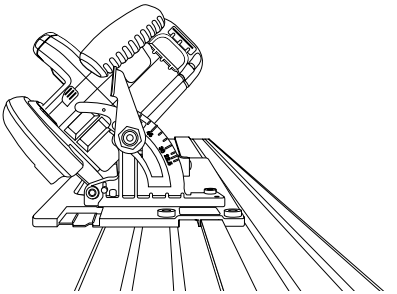

Fig. V

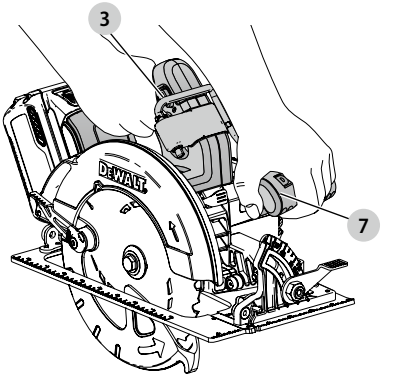

Fig. W

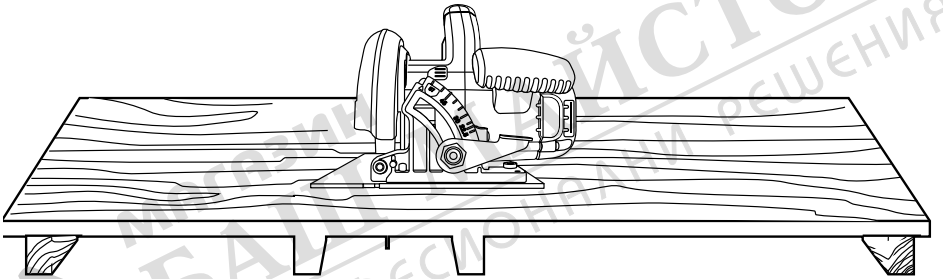

Fig. X

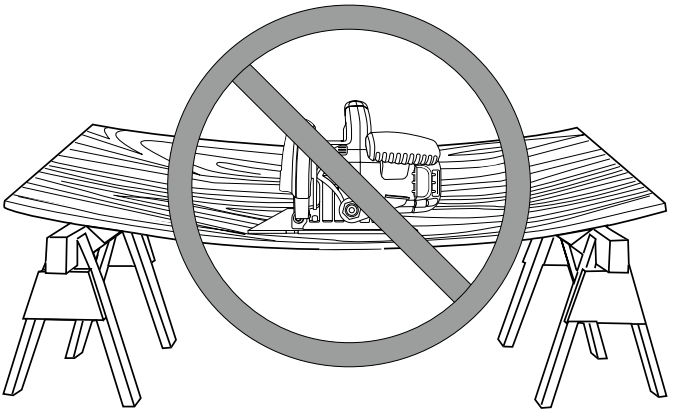

ИНСТРУМЕНТ ПОБЕДИТЕЛЯ
БАШ ПОБЕДИТОРА®
ПРОФЕССИОНАЛНИ РЕШЕНИЯ

Fig. Y

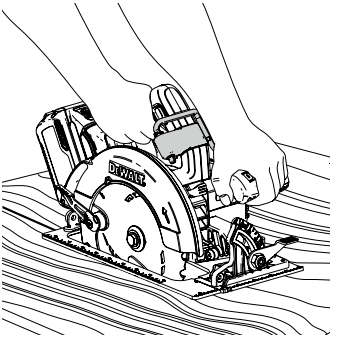

Fig. Z

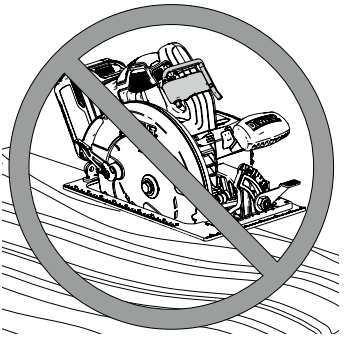

Fig. AA

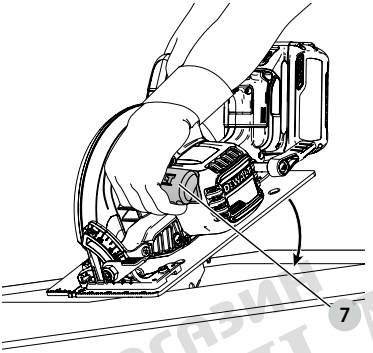

Fig. BB

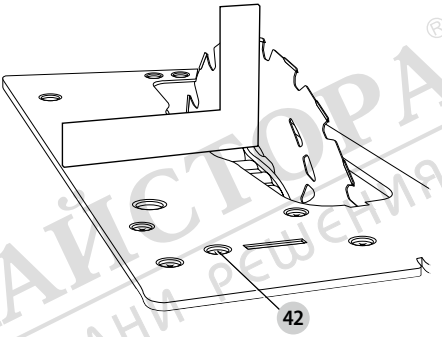

Fig. CC

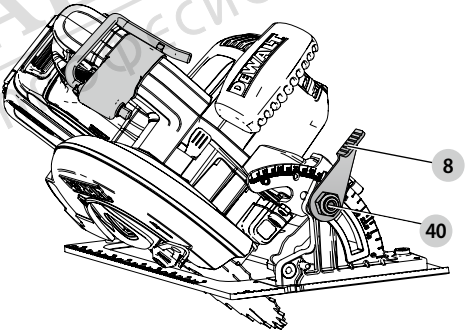

Fig. DD

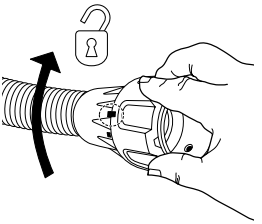

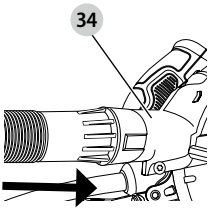

МАГАЗИН БАШ МАЙСТОРА® ПРОФЕСИОНАЛНИ РЕШЕНИЯ

190 mm / 184 mm 54V CORDLESS CIRCULAR SAW DCS578, DCS579, DCS578-XE, DCS579-XE

Congratulations!

You have chosen a DEWALT tool. Years of experience, thorough product development and innovation make DEWALT one of the most reliable partners for professional power tool users.

Technical Data

		DCS578	DCS578-XE	DCS579	DCS579-XE
Voltage	V_{DC}	54	54	54	54
Type		1	1	1	1
Battery type		Li-Ion	Li-Ion	Li-Ion	Li-Ion
No-load speed	min^{-1}	5800	5800	5800	5800
Blade diameter	mm	190	184	190	184
Maximum depth of cut	mm	67	64	61	58
Blade bore	mm	30	20	30	20
Bevel angle adjustment		57	57	57	57
Weight (without battery pack)	kg	3.6	3.6	3.7	3.7
Noise values and/or vibration values (triax vector sum) according to EN62841-2-5:					
L_{PA} (emission sound pressure level)	dB(A)	90	–	90	–
L_{WA} (sound power level)	dB(A)	101	–	101	–
K (uncertainty for the given sound level)	dB(A)	3	–	3	–
Vibration emission value $a_{h,W}$ =	m/s^2	2.2	–	2.2	–
Uncertainty K =	m/s^2	1.5	–	1.5	–

The vibration and/or noise emission level given in this information sheet has been measured in accordance with a standardised test given in EN62841 and may be used to compare one tool with another. It may be used for a preliminary assessment of exposure.

WARNING: *The declared vibration and/or noise emission level represents the main applications of the tool. However if the tool is used for different applications, with different accessories or poorly maintained, the vibration and/or noise emission may differ. This may significantly increase the exposure level over the total working period.*

An estimation of the level of exposure to vibration and/or noise should also take into account the times when the tool is switched off or when it is running but not actually doing the job. This may significantly reduce the exposure level over the total working period.

Identify additional safety measures to protect the operator from the effects of vibration and/or noise such as: maintain the tool and the accessories, keep the hands warm (relevant for vibration), organisation of work patterns.

EC-Declaration of Conformity

Machinery Directive

CE

Cordless Circular Saw
DCS578, DCS579, DCS578-XE, DCS579-XE

DEWALT declares that these products described under ***Technical Data*** are in compliance with:
2006/42/EC, EN62841-1:2015, EN62841-2-5:2014.

These products also comply with Directive 2014/30/EU and 2011/65/EU. For more information, please contact DEWALT at the following address or refer to the back of the manual.

The undersigned is responsible for compilation of the technical file and makes this declaration on behalf of DEWALT.

Markus Rompel
Vice-President Engineering, PTE-Europe
DEWALT, Richard-Klinger-Straße 11,
65510, Idstein, Germany
27.05.2020

магазин ALL МАЙСТОРА® строителни решения

Batteries				Chargers/Charge Times (Minutes)									
Cat #	V_{DC}	Ah	Weight (kg)	DCB104	DCB107	DCB112	DCB113	DCB115	DCB116	DCB117	DCB118	DCB132	DCB119
DCB546	18/54	6.0/2.0	1.05	60	270	170	140	90	80	40	60	90	X
DCB547	18/54	9.0/3.0	1.46	75*	420	270	220	135*	110*	60	75*	135*	X
DCB548	18/54	12.0/4.0	1.44	120	540	350	300	180	150	80	120	180	X

**Date code 201811475B or later*

WARNING: *To reduce the risk of injury, read the instruction manual.*

Definitions: Safety Guidelines

The definitions below describe the level of severity for each signal word. Please read the manual and pay attention to these symbols.

DANGER: *Indicates an imminently hazardous situation which, if not avoided,* ***will*** *result in* ***death or serious injury****.*

WARNING: *Indicates a potentially hazardous situation which, if not avoided,* ***could*** *result in* ***death or serious injury****.*

CAUTION: *Indicates a potentially hazardous situation which, if not avoided,* ***may*** *result in* ***minor or moderate injury****.*

NOTICE: *Indicates a practice* ***not related to personal injury*** *which, if not avoided,* ***may*** *result in* ***property damage****.*

Denotes risk of electric shock.

Denotes risk of fire.

GENERAL POWER TOOL SAFETY WARNINGS

WARNING: Read all safety warnings, instructions, illustrations and specifications provided with this power tool. *Failure to follow all instructions listed below may result in electric shock, fire and/or serious injury.*

SAVE ALL WARNINGS AND INSTRUCTIONS FOR FUTURE REFERENCE

The term "power tool" in the warnings refers to your mains-operated (corded) power tool or battery-operated (cordless) power tool.

1) Work Area Safety

a) ***Keep work area clean and well lit.*** *Cluttered or dark areas invite accidents.*

b) ***Do not operate power tools in explosive atmospheres, such as in the presence of flammable liquids, gases or dust.*** *Power tools create sparks which may ignite the dust or fumes.*

c) ***Keep children and bystanders away while operating a power tool.*** *Distractions can cause you to lose control.*

2) Electrical Safety

a) ***Power tool plugs must match the outlet. Never modify the plug in any way. Do not use any adapter plugs with earthed (grounded) power tools.*** *Unmodified plugs and matching outlets will reduce risk of electric shock.*

b) ***Avoid body contact with earthed or grounded surfaces, such as pipes, radiators, ranges and refrigerators.*** *There is an increased risk of electric shock if your body is earthed or grounded.*

c) ***Do not expose power tools to rain or wet conditions.*** *Water entering a power tool will increase the risk of electric shock.*

d) ***Do not abuse the cord. Never use the cord for carrying, pulling or unplugging the power tool. Keep cord away from heat, oil, sharp edges or moving parts.*** *Damaged or entangled cords increase the risk of electric shock.*

e) ***When operating a power tool outdoors, use an extension cord suitable for outdoor use.*** *Use of a cord suitable for outdoor use reduces the risk of electric shock.*

f) ***If operating a power tool in a damp location is unavoidable, use a residual current device (RCD) protected supply.*** *Use of an RCD reduces the risk of electric shock.*

3) Personal Safety

a) ***Stay alert, watch what you are doing and use common sense when operating a power tool. Do not use a power tool while you are tired or under the influence of drugs, alcohol or medication.*** *A moment of inattention while operating power tools may result in serious personal injury.*

b) ***Use personal protective equipment. Always wear eye protection.*** *Protective equipment such as a dust mask, non-skid safety shoes, hard hat or hearing protection used for appropriate conditions will reduce personal injuries.*

c) ***Prevent unintentional starting. Ensure the switch is in the off-position before connecting to power source and/or battery pack, picking up or carrying the tool.*** *Carrying power tools with your finger on the switch or energising power tools that have the switch on invites accidents.*

d) ***Remove any adjusting key or wrench before turning the power tool on.*** *A wrench or a key left attached to a rotating part of the power tool may result in personal injury.*

e) ***Do not overreach. Keep proper footing and balance at all times.*** *This enables better control of the power tool in unexpected situations.*

f) ***Dress properly. Do not wear loose clothing or jewellery. Keep your hair and clothing away from***

МАГАЗИН ПАЛЫ МАКСТОЛ ПРОФЕССИОНАЛЬНЫЙ ИНСТРУМЕНТ

moving parts. *Loose clothes, jewellery or long hair can be caught in moving parts.*

g) ***If devices are provided for the connection of dust extraction and collection facilities, ensure these are connected and properly used.*** *Use of dust collection can reduce dust-related hazards.*

h) ***Do not let familiarity gained from frequent use of tools allow you to become complacent and ignore tool safety principles.*** *A careless action can cause severe injury within a fraction of a second.*

4) Power Tool Use and Care

a) ***Do not force the power tool. Use the correct power tool for your application.*** *The correct power tool will do the job better and safer at the rate for which it was designed.*

b) ***Do not use the power tool if the switch does not turn it on and off.*** *Any power tool that cannot be controlled with the switch is dangerous and must be repaired.*

c) ***Disconnect the plug from the power source and/or remove the battery pack, if detachable, from the power tool before making any adjustments, changing accessories, or storing power tools.*** *Such preventive safety measures reduce the risk of starting the power tool accidentally.*

d) ***Store idle power tools out of the reach of children and do not allow persons unfamiliar with the power tool or these instructions to operate the power tool.*** *Power tools are dangerous in the hands of untrained users.*

e) ***Maintain power tools and accessories. Check for misalignment or binding of moving parts, breakage of parts and any other condition that may affect the power tool's operation. If damaged, have the power tool repaired before use.*** *Many accidents are caused by poorly maintained power tools.*

f) ***Keep cutting tools sharp and clean.*** *Properly maintained cutting tools with sharp cutting edges are less likely to bind and are easier to control.*

g) ***Use the power tool, accessories and tool bits etc. in accordance with these instructions, taking into account the working conditions and the work to be performed.*** *Use of the power tool for operations different from those intended could result in a hazardous situation.*

h) ***Keep handles and grasping surfaces dry, clean and free from oil and grease.*** *Slippery handles and grasping surfaces do not allow for safe handling and control of the tool in unexpected situations.*

5) Battery Tool Use and Care

a) ***Recharge only with the charger specified by the manufacturer.*** *A charger that is suitable for one type of battery pack may create a risk of fire when used with another battery pack.*

b) ***Use power tools only with specifically designated battery packs.*** *Use of any other battery packs may create a risk of injury and fire.*

c) ***When battery pack is not in use, keep it away from other metal objects, like paper clips, coins, keys, nails, screws or other small metal objects, that can make a connection from one terminal to another.*** *Shorting the battery terminals together may cause burns or a fire.*

d) ***Under abusive conditions, liquid may be ejected from the battery; avoid contact. If contact accidentally occurs, flush with water. If liquid contacts eyes, additionally seek medical help.*** *Liquid ejected from the battery may cause irritation or burns.*

e) ***Do not use a battery pack or tool that is damaged or modified.*** *Damaged or modified batteries may exhibit unpredictable behaviour resulting in fire, explosion or risk of injury.*

f) ***Do not expose a battery pack or tool to fire or excessive temperature.*** *Exposure to fire or temperature above 130 °C may cause explosion.*

g) ***Follow all charging instructions and do not charge the battery pack or tool outside the temperature range specified in the instructions.*** *Charging improperly or at temperatures outside the specified range may damage the battery and increase the risk of fire.*

6) Service

a) ***Have your power tool serviced by a qualified repair person using only identical replacement parts.*** *This will ensure that the safety of the power tool is maintained.*

b) ***Never service damaged battery packs.*** *Service of battery packs should only be performed by the manufacturer or authorized service providers.*

FURTHER SAFETY INSTRUCTIONS FOR ALL SAWS

Kickback Causes and Related Warnings

- *Kickback is a sudden reaction to a pinched, jammed or misaligned saw blade, causing an uncontrolled saw to lift up and out of the workpiece toward the operator;*
- *When the blade is pinched or jammed tightly by the kerf closing down, the blade stalls and the motor reaction drives the unit rapidly back toward the operator;*
- *If the blade becomes twisted or misaligned in the cut, the teeth at the back edge of the blade can dig into the top surface of the wood causing the blade to climb out of the kerf and jump back toward the operator.*

Kickback is the result of saw misuse and/or incorrect operating procedures or conditions and can be avoided by taking proper precautions as given below:

a) ***Maintain a firm grip with both hands on the saw and position your arms to resist kickback forces. Position your body to either side of the blade, but not in line with the blade.*** *Kickback could cause the saw to jump backwards, but kickback forces can be controlled by the operator, if proper precautions are taken.*

b) ***When blade is binding, or when interrupting a cut for any reason, release the trigger and hold the saw motionless in the material until the blade comes to a complete stop. Never attempt to remove the saw from the work or pull the saw backward while the blade is in motion or kickback may occur.*** *Investigate*

and take corrective actions to eliminate the cause of blade binding.

c) ***When restarting a saw in the workpiece, centre the saw blade in the kerf so that the saw teeth are not engaged into the material.*** *If saw blade binds, it may walk up or kickback from the workpiece as the saw is restarted.*

d) ***Support large panels to minimise the risk of blade pinching and kickback. Large panels tend to sag under their own weight.*** *Supports must be placed under the panel on both sides, near the line of cut and near the edge of the panel.*

e) ***Do not use dull or damaged blades.*** *Unsharpened or improperly set blades produce narrow kerf causing excessive friction, blade binding and kickback.*

f) ***Blade depth and bevel adjusting locking levers must be tight and secure before making cut.*** *If blade adjustment shifts while cutting, it may cause binding and kickback.*

g) ***Use extra caution when sawing into existing walls or other blind areas.*** *The protruding blade may cut objects that can cause kickback.*

SAFETY INSTRUCTIONS FOR SAWS WITH A PENDULUM BLADE GUARD

Lower Guard Function

a) ***Check the lower guard for proper closing before each use. Do not operate the saw if the lower guard does not move freely and close instantly. Never clamp or tie the lower guard into the open position. If the saw is accidentally dropped, the lower guard may be bent.*** *Raise the lower guard with the retracting handle and make sure it moves freely and does not touch the blade or any other part, in all angles and depths of cut.*

b) ***Check the operation of the lower guard spring. If the guard and the spring are not operating properly, they must be serviced before use.*** *Lower guard may operate sluggishly due to damaged parts, gummy deposits, or a build-up of debris.*

c) ***The lower guard may be retracted manually only for special cuts such as "plunge cuts" and "compound cuts". Raise the lower guard by retracting handle and as soon as blade enters the material, the lower guard must be released.*** *For all other sawing, the lower guard should operate automatically.*

d) ***Always observe that the lower guard is covering the blade before placing the saw down on bench or floor. An unprotected, coasting blade will cause the saw to walk backwards, cutting whatever is in its path.*** *Be aware of the time it takes for the blade to stop after switch is released.*

Additional Safety Instructions for Circular Saws

- ***Wear ear protectors.*** *Exposure to noise can cause hearing loss.*
- ***Wear a dust mask.*** *Exposure to dust particles can cause breathing difficulty and possible injury.*
- ***Do not use blades of larger or smaller diameter than recommended.*** *For the proper blade rating refer to the* **Technical Data**. *Use only the blades specified in this manual, complying with EN 847-1.*
- ***Use only saw blades that are marked with a speed equal or higher than the speed marked on the tool.***
- ***Avoid overheating of blade tips.***
- ***Install the dust extraction port onto the saw before use.***
- ***Never use abrasive cut-off wheels***.
- ***Do not use water feed attachments.***
- ***Use clamps or another practical way to secure and support the workpiece to a stable platform.*** *Holding the work by hand or against your body leaves it unstable and may lead to loss of control.*

Residual Risks

In spite of the application of the relevant safety regulations and the implementation of safety devices, certain residual risks cannot be avoided. These are:

- *Impairment of hearing.*
- *Risk of personal injury due to flying particles.*
- *Risk of burns due to accessories becoming hot during operation.*
- *Risk of personal injury due to prolonged use.*

SAVE THESE INSTRUCTIONS

Chargers

DEWALT chargers require no adjustment and are designed to be as easy as possible to operate.

Electrical Safety

The electric motor has been designed for one voltage only. Always check that the battery pack voltage corresponds to the voltage on the rating plate. Also make sure that the voltage of your charger corresponds to that of your mains.

Your DEWALT charger is double insulated in accordance with EN60335; therefore no earth wire is required.

If the supply cord is damaged, it must be replaced only by DEWALT or an authorised service organisation.

Mains Plug Replacement (U.K. & Ireland Only)

If a new mains plug needs to be fitted:

- *Safely dispose of the old plug.*
- *Connect the brown lead to the live terminal in the plug.*
- *Connect the blue lead to the neutral terminal.*

ЛЕСТИН MAKSTOR ® ПРОФЕССИОНАЛЬНЫЕ РЕШЕНИЯ

WARNING: *No connection is to be made to the earth terminal.*

Follow the fitting instructions supplied with good quality plugs. Recommended fuse: 3 A.

Using an Extension Cable

An extension cord should not be used unless absolutely necessary. Use an approved extension cable suitable for the power input of your charger (see ***Technical Data***). The minimum conductor size is 1 mm^2; the maximum length is 30 m.

When using a cable reel, always unwind the cable completely.

Important Safety Instructions for All Battery Chargers

SAVE THESE INSTRUCTIONS: This manual contains important safety and operating instructions for compatible battery chargers (refer to ***Technical Data***).

- *Before using charger, read all instructions and cautionary markings on charger, battery pack, and product using battery pack.*

WARNING: *Shock hazard. Do not allow any liquid to get inside charger. Electric shock may result.*

WARNING: *We recommend the use of a residual current device with a residual current rating of 30mA or less.*

CAUTION: *Burn hazard. To reduce the risk of injury, charge only DEWALT rechargeable batteries. Other types of batteries may burst causing personal injury and damage.*

CAUTION: *Children should be supervised to ensure that they do not play with the appliance.*

NOTICE: *Under certain conditions, with the charger plugged into the power supply, the exposed charging contacts inside the charger can be shorted by foreign material. Foreign materials of a conductive nature such as, but not limited to, steel wool, aluminum foil or any buildup of metallic particles should be kept away from charger cavities. Always unplug the charger from the power supply when there is no battery pack in the cavity. Unplug charger before attempting to clean.*

- ***DO NOT attempt to charge the battery pack with any chargers other than the ones in this manual.*** *The charger and battery pack are specifically designed to work together.*
- ***These chargers are not intended for any uses other than charging DEWALT rechargeable batteries.*** *Any other uses may result in risk of fire, electric shock or electrocution.*
- ***Do not expose charger to rain or snow.***
- ***Pull by plug rather than cord when disconnecting charger.*** *This will reduce risk of damage to electric plug and cord.*
- ***Make sure that cord is located so that it will not be stepped on, tripped over, or otherwise subjected to damage or stress.***
- ***Do not use an extension cord unless it is absolutely necessary.*** *Use of improper extension cord could result in risk of fire,electric shock, or electrocution.*
- ***Do not place any object on top of charger or place the charger on a soft surface that might block the ventilation slots and result in excessive internal heat.*** *Place the charger in a position away from any heat source. The charger is ventilated through slots in the top and the bottom of the housing.*
- ***Do not operate charger with damaged cord or plug—*** *have them replaced immediately.*
- ***Do not operate charger if it has received a sharp blow, been dropped, or otherwise damaged in any way.*** *Take it to an authorised service centre.*
- ***Do not disassemble charger; take it to an authorised service centre when service or repair is required.*** *Incorrect reassembly may result in a risk of electric shock, electrocution or fire.*
- *In case of damaged power supply cord, the supply cord must be replaced immediately by the manufacturer, its service agent or similar qualified person to prevent any hazard.*
- ***Disconnect the charger from the outlet before attempting any cleaning. This will reduce the risk of electric shock.*** *Removing the battery pack will not reduce this risk.*
- ***NEVER*** *attempt to connect two chargers together.*
- ***The charger is designed to operate on standard 230V household electrical power. Do not attempt to use it on any other voltage.*** *This does not apply to the vehicular charger.*

Charging a Battery (Fig. A)

1. Plug the charger into an appropriate outlet before inserting battery pack.
2. Insert the battery pack **16** into the charger, making sure the battery pack is fully seated in the charger. The red (charging) light will blink repeatedly indicating that the charging process has started.
3. The completion of charge will be indicated by the red light remaining ON continuously. The battery pack is fully charged and may be used at this time or left in the charger. To remove the battery pack from the charger, push the battery release button **17** on the battery pack.

NOTE: To ensure maximum performance and life of lithium-ion battery packs, charge the battery pack fully before first use.

Charger Operation

Refer to the indicators below for the charge status of the battery pack.

Charge Indicators		
	Charging	
	Fully Charged	
	Hot/Cold Pack Delay*	

*****The red light will continue to blink, but a yellow indicator light will be illuminated during this operation. Once the battery pack

МАГАЗИН ЗАЩИТА СИСТЕМИ РЕГИСТЪР

has reached an appropriate temperature, the yellow light will turn off and the charger will resume the charging procedure.

The compatible charger(s) will not charge a faulty battery pack. The charger will indicate faulty battery by refusing to light.

NOTE: This could also mean a problem with a charger.

If the charger indicates a problem, take the charger and battery pack to be tested at an authorised service centre.

Hot/Cold Pack Delay

When the charger detects a battery pack that is too hot or too cold, it automatically starts a Hot/Cold Pack Delay, suspending charging until the battery pack has reached an appropriate temperature. The charger then automatically switches to the pack charging mode. This feature ensures maximum battery pack life.

A cold battery pack will charge at a slower rate than a warm battery pack. The battery pack will charge at that slower rate throughout the entire charging cycle and will not return to maximum charge rate even if the battery pack warms.

The DCB118 charger is equipped with an internal fan designed to cool the battery pack. The fan will turn on automatically when the battery pack needs to be cooled. Never operate the charger if the fan does not operate properly or if ventilation slots are blocked. Do not permit foreign objects to enter the interior of the charger.

Electronic Protection System

XR Li-Ion tools are designed with an Electronic Protection System that will protect the battery pack against overloading, overheating or deep discharge.

The tool will automatically turn off if the Electronic Protection System engages. If this occurs, place the lithium-ion battery pack on the charger until it is fully charged.

Wall Mounting

These chargers are designed to be wall mountable or to sit upright on a table or work surface. If wall mounting, locate the charger within reach of an electrical outlet, and away from a corner or other obstructions which may impede air flow. Use the back of the charger as a template for the location of the mounting screws on the wall. Mount the charger securely using drywall screws (purchased separately) at least 25.4 mm long with a screw head diameter of 7–9 mm, screwed into wood to an optimal depth leaving approximately 5.5 mm of the screw exposed. Align the slots on the back of the charger with the exposed screws and fully engage them in the slots.

Charger Cleaning Instructions

WARNING: Shock hazard. Disconnect the charger from the AC outlet before cleaning*. Dirt and grease may be removed from the exterior of the charger using a cloth or soft non-metallic brush. Do not use water or any cleaning solutions. Never let any liquid get inside the tool; never immerse any part of the tool into a liquid.*

Battery Packs

Important Safety Instructions for All Battery Packs

When ordering replacement battery packs, be sure to include catalogue number and voltage.

The battery pack is not fully charged out of the carton. Before using the battery pack and charger, read the safety instructions below. Then follow charging procedures outlined.

READ ALL INSTRUCTIONS

- ***Do not charge or use battery in explosive atmospheres, such as in the presence of flammable liquids, gases or dust.*** *Inserting or removing the battery from the charger may ignite the dust or fumes.*
- ***Never force battery pack into charger. Do not modify battery pack in any way to fit into a non-compatible charger as battery pack may rupture causing serious personal injury.***
- *Charge the battery packs only in DEWALT chargers.*
- ***DO NOT*** *splash or immerse in water or other liquids.*
- ***Do not store or use the tool and battery pack in locations where the temperature may fall below 4 ˚C (39.2 ˚F) (such as outside sheds or metal buildings in winter), or reach or exceed 40 ˚C (104 ˚F) (such as outside sheds or metal buildings in summer).***
- ***Do not incinerate the battery pack even if it is severely damaged or is completely worn out.*** *The battery pack can explode in a fire. Toxic fumes and materials are created when lithium-ion battery packs are burned.*
- ***If battery contents come into contact with the skin, immediately wash area with mild soap and water.*** *If battery liquid gets into the eye, rinse water over the open eye for 15 minutes or until irritation ceases. If medical attention is needed, the battery electrolyte is composed of a mixture of liquid organic carbonates and lithium salts.*
- ***Contents of opened battery cells may cause respiratory irritation.*** *Provide fresh air. If symptoms persists, seek medical attention.*

WARNING: *Burn hazard. Battery liquid may be flammable if exposed to spark or flame.*

WARNING: *Never attempt to open the battery pack for any reason. If battery pack case is cracked or damaged, do not insert into charger. Do not crush, drop or damage battery pack. Do not use a battery pack or charger that has received a sharp blow, been dropped, run over or damaged in any way (i.e., pierced with a nail, hit with a hammer, stepped on). Electric shock or electrocution may result. Damaged battery packs should be returned to service centre for recycling.*

WARNING: Fire hazard. Do not store or carry the battery pack so that metal objects can contact exposed battery terminals. *For example, do not place the battery pack in aprons, pockets, tool boxes, product kit boxes, drawers, etc., with loose nails, screws, keys, etc.*

ПРОФЕСИОНАЛНИ ИНСТРУМЕНТИ БАЛ МАРКЕТ ООД

CAUTION: When not in use, place tool on its side on a stable surface where it will not cause a tripping or falling hazard. *Some tools with large battery packs will stand upright on the battery pack but may be easily knocked over.*

Transportation

WARNING: Fire hazard. *Transporting batteries can possibly cause fire if the battery terminals inadvertently come in contact with conductive materials. When transporting batteries, make sure that the battery terminals are protected and well insulated from materials that could contact them and cause a short circuit.* ***NOTE:*** *Lithium-ion batteries should not be put in checked baggage.*

DEWALT batteries comply with all applicable shipping regulations as prescribed by industry and legal standards which include UN Recommendations on the Transport of Dangerous Goods; International Air Transport Association (IATA) Dangerous Goods Regulations, International Maritime Dangerous Goods (IMDG) Regulations, and the European Agreement Concerning The International Carriage of Dangerous Goods by Road (ADR). Lithium-ion cells and batteries have been tested to section 38.3 of the UN Recommendations on the Transport of Dangerous Goods Manual of Tests and Criteria.

In most instances, shipping a DEWALT battery pack will be excepted from being classified as a fully regulated Class 9 Hazardous Material. In general, only shipments containing a lithium-ion battery with an energy rating greater than 100 Watt Hours (Wh) will require being shipped as fully regulated Class 9. All lithium-ion batteries have the Watt Hour rating marked on the pack. Furthermore, due to regulation complexities, DEWALT does not recommend air shipping lithium-ion battery packs alone regardless of Watt Hour rating. Shipments of tools with batteries (combo kits) can be air shipped as excepted if the Watt Hour rating of the battery pack is no greater than 100 Wh.

Regardless of whether a shipment is considered excepted or fully regulated, it is the shipper's responsibility to consult the latest regulations for packaging, labeling/marking and documentation requirements.

The information provided in this section of the manual is provided in good faith and believed to be accurate at the time the document was created. However, no warranty, expressed or implied, is given. It is the buyer's responsibility to ensure that its activities comply with the applicable regulations.

Transporting the FLEXVOLT™ Battery

The DEWALT FLEXVOLT™ battery has two modes: **Use** and **Transport**.

Use Mode: When the FLEXVOLT™ battery stands alone or is in a DEWALT 18V product, it will operate as an 18V battery. When the FLEXVOLT™ battery is in a 54V or a 108V (two 54V batteries) product, it will operate as a 54V battery.

Transport Mode: When the cap is attached to the FLEXVOLT™ battery, the battery is in Transport mode. Keep the cap for shipping.

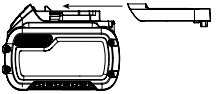

When in Transport mode, strings of cells are electrically disconnected within the pack resulting in 3 batteries with a lower Watt hour (Wh) rating as compared to 1 battery with a higher Watt hour rating. This increased quantity of 3 batteries with the lower Watt hour rating can exempt the pack from certain shipping regulations that are imposed upon the higher Watt hour batteries.

For example, the Transport Wh rating might indicate 3 x 36 Wh, meaning 3 batteries of 36 Wh each. The Use Wh rating might indicate 108 Wh (1 battery implied).

Example of Use and Transport Label Marking

Storage Recommendations

1. The best storage place is one that is cool and dry away from direct sunlight and excess heat or cold. For optimum battery performance and life, store battery packs at room temperature when not in use.
2. For long storage, it is recommended to store a fully charged battery pack in a cool, dry place out of the charger for optimal results.

NOTE: Battery packs should not be stored completely depleted of charge. The battery pack will need to be recharged before use.

Labels on Charger and Battery Pack

In addition to the pictographs used in this manual, the labels on the charger and the battery pack may show the following pictographs:

Read instruction manual before use.

See ***Technical Data*** for charging time.

Do not probe with conductive objects.

Do not charge damaged battery packs.

Do not expose to water.

Have defective cords replaced immediately

Charge only between 4 °C and 40 °C.

Only for indoor use.

ЭЛЕКТРОПРИБОР ЦЕНТР ®
ПРОФЕССИОНАЛЬНЫЕ РЕШЕНИЯ

Discard the battery pack with due care for the environment.

Charge DEWALT battery packs only with designated DEWALT chargers. Charging battery packs other than the designated DEWALT batteries with a DEWALT charger may make them burst or lead to other dangerous situations.

Do not incinerate the battery pack.

USE (without transport cap). Example: Wh rating indicates 108 Wh (1 battery with 108 Wh).

TRANSPORT (with built-in transport cap). Example: Wh rating indicates 3 x 36 Wh (3 batteries of 36 Wh).

Battery Type

The following tools operate on a 54 volt battery pack: DCS578, DCS579, DCS578-XE, DCS579-XE

These battery packs may be used: DCB546, DCB547, DCB548. Refer to ***Technical Data*** for more information.

Package Contents

The package contains:

1 Circular saw
1 Circular saw blade
1 Blade wrench
1 Parallel fence
1 Dust extraction port
1 Charger (T models only)
1 Li-Ion battery pack (C1, D1, L1, M1, P1, S1, T1, X1, Y1 models)
2 Li-Ion battery packs (C2, D2, L2, M2, P2, S2, T2, X2, Y2 models)
3 Li-Ion battery packs (C3, D3, L3, M3, P3, S3, T3, X3, Y3 models)
1 Instruction manual

NOTE: Battery packs, chargers and kitboxes are not included with N models. Battery packs and chargers are not included with NT models. B models include Bluetooth® battery packs.

NOTE: The Bluetooth® word mark and logos are registered trademarks owned by the Bluetooth®, SIG, Inc. and any use of such marks by DEWALT is under license. Other trademarks and trade names are those of their respective owners.

- *Check for damage to the tool, parts or accessories which may have occurred during transport.*
- *Take the time to thoroughly read and understand this manual prior to operation.*

Markings on Tool

The following pictograms are shown on the tool:

Read instruction manual before use.

Wear ear protection.

Wear eye protection.

Visible radiation. Do not stare into light.

Date Code Position (Fig. H)

The date code **18**, which also includes the year of manufacture, is printed into the housing.

Example:

2020 XX XX

Year and week of Manufacture

Description (Fig. A)

WARNING: *Never modify the power tool or any part of it. Damage or personal injury could result.*

1 Trigger switch
2 Trigger switch lock-off button
3 Main handle
4 Rafter hook (Included with some models)
5 Blade lock
6 End cap
7 Auxiliary handle
8 Bevel adjustment lever
9 Bevel angle adjustment mechanism
10 LED worklight
11 Base plate
12 Lower blade guard
13 Blade clamping screw
14 Lower guard lever
15 Upper blade guard
16 Battery pack
17 Battery release button
18 Date code (Fig. H)
19 Rail adjuster (0 ° cutting)
20 Rail adjuster (1–45 ° bevel cutting)
21 Fuel gauge button (on battery pack)

Intended Use

These heavy-duty circular saws are designed for professional wood cutting applications. Do not cut metal, plastic, concrete, masonry or fiber cement materials.

DO NOT use under wet conditions or in the presence of flammable liquids or gases.

These heavy-duty saws are professional power tools.

DO NOT let children come into contact with the tool. Supervision is required when inexperienced operators use this tool.

- **Young children and the infirm.** This appliance is not intended for use by young children or infirm persons without supervision.
- This product is not intended for use by persons (including children) suffering from diminished physical, sensory or mental abilities; lack of experience, knowledge or skills unless they are supervised by a person responsible for their safety. Children should never be left alone with this product.

Магазин ВАШ МАЙСТОРА® професионални решения

ASSEMBLY AND ADJUSTMENTS

WARNING: To reduce the risk of serious personal injury, turn tool off and disconnect battery pack before making any adjustments or removing/ installing attachments or accessories. *An accidental start-up can cause injury.*

WARNING: *Use only DEWALT battery packs and chargers.*

Inserting and Removing the Battery Pack from the Tool (Fig. A)

NOTE: Make sure your battery pack **16** is fully charged.

To Install the Battery Pack into the Tool Handle

1. Align the battery pack **16** with the rails inside the tool's handle (Fig. A).
2. Slide it into the handle until the battery pack is firmly seated in the tool and ensure that you hear the lock snap into place.

To Remove the Battery Pack from the Tool

1. Press the release button **17** and firmly pull the battery pack out of the tool handle.
2. Insert battery pack into the charger as described in the charger section of this manual.

Fuel Gauge Battery Packs (Fig. C)

Some DEWALT battery packs include a fuel gauge which consists of three green LED lights that indicate the level of charge remaining in the battery pack.

To actuate the fuel gauge **21**, press and hold the fuel gauge button. A combination of the three green LED lights will illuminate designating the level of charge left. When the level of charge in the battery is below the usable limit, the fuel gauge will not illuminate and the battery will need to be recharged.

NOTE: The fuel gauge is only an indication of the charge left on the battery pack. It does not indicate tool functionality and is subject to variation based on product components, temperature and end-user application.

Changing Blades

To Install the Blade (Fig. B–E)

1. Remove the battery.
2. Using the lower guard lever **14**, retract the lower blade guard **12** and place blade on saw spindle against the inner clamp washer **22**, making sure that the blade will rotate in the proper direction (the direction of the rotation arrow on the saw blade and the teeth must point in the same direction as the direction of rotation arrow on the saw). Do not assume that the printing on the blade will always be facing you when properly installed. When retracting the lower blade guard to install the blade, check the condition and operation of the lower blade guard to assure that it is working properly. Make sure it moves freely and does not touch the blade or any other part, in all angles and depths of cut.
3. Place outer clamp washer **23** on saw spindle with the beveled edge facing out. Make sure the 30 mm diameter on the blade side of the clamp fits into the 30 mm hole in the saw blade to ensure centring of the blade.
4. Thread the blade clamping screw **13** onto the saw spindle by hand (screw has right-hand threads and must be turned clockwise to tighten).
5. Depress the blade lock **5** while turning the saw spindle with the blade wrench **24** stored underneath the battery compartment, until the blade lock engages and the blade stops rotating.
6. Tighten the blade clamping screw firmly with the blade wrench.

   NOTICE: *Never engage the blade lock while saw is running, or engage in an effort to stop the tool. Never turn the saw on while the blade lock is engaged. Serious damage to your saw will result.*

To Replace the Blade (Fig. B–E)

1. Remove the battery.
2. To loosen the blade clamping screw **13**, depress the blade lock **5** and turn the saw spindle with the blade wrench **24**, stored underneath the battery compartment, until the blade lock engages and the blade stops rotating. With the blade lock engaged, turn the blade clamping screw counterclockwise with the blade wrench (screw has right-hand threads and must be turned counterclockwise to loosen).
3. Remove the blade clamping screw **13** and outer clamp washer **23**. Remove old blade.
4. Clean any sawdust that may have accumulated in the guard or clamp washer area and check the condition and operation of the lower blade guard as previously outlined. Do not lubricate this area.
5. Select the proper blade for the application (refer to ***Blades***). Always use blades that are the correct size (diameter) with the proper size and shape centre hole for mounting on the saw spindle. Always assure that the maximum recommended speed (rpm) on the saw blade meets or exceeds the speed (rpm) of the saw.
6. Follow steps 1 through 5 under ***To Install the Blade***, making sure that the blade will rotate in the proper direction.

Lower Blade Guard

WARNING: The lower blade guard is a safety feature that reduces the risk of serious personal injury. Never use the saw if the lower guard is missing, damaged, misassembled or not working properly. Do not rely on the lower blade guard to protect you under all circumstances. Your safety depends on following all warnings and precautions as well as proper operation of the saw. Check the lower blade guard for proper closing before each use. If the lower blade guard is missing or not working properly, have the saw serviced before using. To assure product safety and reliability, repair, maintenance and adjustment should be performed by an authorised service centre or other qualified service organization, always using identical replacement parts.

ПАЛЕ МАЙСТОРА®
Инструменти и консумативи

Checking the Lower Guard (Fig. A)

1. Turn tool off and disconnect from power supply.
2. Rotate the lower guard lever **14** from the fully closed position to the fully open position.
3. Release the lever and observe the guard **12** return to the fully closed position.

The tool should be serviced by a qualified service centre if it:

- fails to return to the fully closed position,
- moves intermittently or slowly, or
- contacts the blade or any part of the tool in all angles and depth of cut.

Blades

WARNING: *To minimise the risk of eye injury, always use eye protection. Carbide is a hard but brittle material. Foreign objects in the workpiece such as wire or nails can cause tips to crack or break. Only operate saw when proper saw blade guard is in place. Mount blade securely in proper rotation before using, and always use a clean, sharp blade.*

WARNING: *Do not cut metal, plastic, concrete, masonry or fiber cement materials with this saw.*

190 mm Diameter	
Application	Teeth
Fast rip	18
Rip	24
General Purpose	40

184 mm Diameter	
Application	Teeth
Rip	24
General Purpose	36
Finish	60

If you need assistance regarding blades, please contact your local DEWALT dealer.

Kickback

Kickback is a sudden reaction to a pinched, bound or misaligned saw blade, causing an uncontrolled saw to lift up and out of the workpiece toward the operator. When the blade is pinched or bound tightly by the kerf closing down, the blade stalls and the motor reaction drives the unit rapidly back toward the operator. If the blade becomes twisted or misaligned in the cut, the teeth at the back edge of the blade can dig into the top surface of the material causing the blade to climb out of the kerf and jump back toward the operator.

Kickback is more likely to occur when any of the following conditions exists.

1. **IMPROPER WORKPIECE SUPPORT (FIG. X)**
   a. Sagging or improper lifting of the cut off piece can cause pinching of the blade and lead to kickback (Fig. X).
   b. Cutting through material supported at the outer ends only can cause kickback. As the material weakens it sags, closing down the kerf and pinching the blade (Fig. X).
   c. Cutting off a cantilevered or overhanging piece of material from the bottom up in a vertical direction can cause kickback. The falling cut off piece can pinch the blade.
   d. Cutting off long narrow strips can cause kickback. The cut off strip can sag or twist closing the kerf and pinching the blade.
   e. Snagging the lower guard on a surface below the material being cut momentarily reduces operator control. The saw can lift partially out of the cut increasing the chance of blade twist.
2. **IMPROPER DEPTH OF CUT SETTING ON SAW (FIG. H)**
   To make the most efficient cut, the blade should protrude only far enough to expose a tooth as shown in Figure H. This allows the shoe to support the blade and minimises twisting and pinching in the material. See the section titled ***Depth of Cut Adjustment***.
3. **BLADE TWISTING (MISALIGNMENT IN CUT)**
   a. Pushing harder to cut can cause the blade to twist.
   b. Trying to turn the saw in the cut (trying to get back on the marked line) can cause blade twist.
   c. Overreaching or operating the saw with poor body control (out of balance), can result in twisting the blade.
   d. Changing hand grip or body position while cutting can result in blade twist.
   e. Backing up the saw to clear blade can lead to twist.
4. **USE OF DULL OR DIRTY BLADES**
   Dull blades cause increased loading of the saw. To compensate, an operator will usually push harder which further loads the unit and promotes twisting of the blade in the kerf. Worn blades may also have insufficient body clearance which increases the chance of binding and increased loading.
5. **RESTARTING A CUT WITH THE BLADE TEETH JAMMED AGAINST THE MATERIAL**
   The saw should be brought up to full operating speed before starting a cut or restarting a cut after the unit has been stopped with the blade in the kerf. Failure to do so can cause stalling and kickback.

Any other conditions which could result in pinching, binding, twisting, or misalignment of the blade could cause kickback. Refer to the sections ***Further Safety Instructions for All Saws*** and ***Blades*** for procedures and techniques that will minimise the occurrence of kickback.

Depth of Cut Adjustment (Fig. F–H)

1. Raise the depth adjustment lever **25** to loosen.
2. To obtain the correct depth of cut, align the appropriate mark on the depth adjustment strap **26** with notch **27** on the upper blade guard.
3. Tighten the depth adjustment lever.

МАГАЗИН БАШ МАСТОРА ПРОФЕССИОНАЛЬНОГО ОБОРУДОВАНИЯ

4. For the most efficient cutting action using a carbide tipped saw blade, set the depth adjustment so that about one half of a tooth projects below the surface of the wood to be cut.
5. A method of checking for the correct cutting depth is shown in Fig. H. Lay a piece of the material you plan to cut along the side of the blade, as shown in the Figure, and observe how much tooth projects beyond the material.

Adjusting Depth Adjustment Lever (Fig. G)

It may be desirable to adjust the depth adjustment lever **25**. It may loosen in time and hit the base plate before tightening.

To Tighten the Lever

1. Hold depth adjustment lever **25** and loosen the locknut **28**.
2. Adjust the depth adjustment lever by rotating it in the desired direction about 1/8 of a revolution.
3. Retighten nut.

Bevel Angle Adjustment (Fig. A, I)

The bevel angle adjustment mechanism **9** can be adjusted between 0 ° and 57 °.

To achieve better accuracy in cutting, use the fine adjustment markings located on the pivot bracket **29**.

1. Raise the bevel adjustment lever **8** to loosen.
2. Tilt the base plate to the desired angle by aligning the fine bevel pointer **30** with the desired angle mark on the pivot bracket **29**.
3. Lower the bevel adjustment lever to retighten.

Bevel Detent (Fig. I)

The DCS578 and DCS579 are equipped with a bevel detent feature. As you tilt the base plate you will hear a click and feel the base plate stop at both 22.5 and 45 degrees. If either of these is the desired angle, retighten the lever **8** by lowering it. If you desire another angle, continue tilting the base plate until the coarse bevel pointer **31** or the fine pointer **30** aligns with the desired mark.

Cut Length Indicator (Fig. J)

The markings on the side of the base plate **11** show the length of the slot being cut into the material at the full depth of the cut. The markings are in increments of 5 mm.

Mounting and Adjusting the Parallel Fence (Fig. K)

The parallel fence **33** is used for cutting parallel to the edge of the workpiece.

Mounting

1. Slacken the parallel fence adjustment knob **32** to allow the parallel fence to pass.
2. Insert the parallel fence **33** in the base plate **11** as shown.
3. Tighten the parallel fence adjustment knob **32**.

Adjusting

1. Slacken the fence adjustment knob **32** and set the parallel fence **33** to the desired width. The adjustment can be read on the parallel fence scale.
2. Tighten the fence adjustment knob **32**.

Mounting the Dust Extraction Port (Fig. A, F, L)

Your DCS578/DCS579 circular saws are supplied with a dust extraction port.

To Install Dust Extraction Port

1. Fully loosen depth adjustment lever **25**.
2. Place base plate **11** in the lowest position.
3. Align the left half of the dust extraction port **34** over upper blade guard **15** as shown. Be sure to insert the tab into the casting notch on the tool. When installed correctly, it will snap fully over the original depth of cut pointer.
4. Align the right-hand piece with the left.
5. Insert screws and tighten securely.

Guide Rail System (Fig. M)

DCS579

Guide rails, available in different lengths as accessories, allow the use of the circular saw for precise, straight clean cuts and simultaneously protect the workpiece surface against damage. In conjunction with additional accessories, exact angled cuts, mitre cuts and fitting work can be completed with the guide rail system.

Clamps **37** are available to secure the guide rail **35** to the workpiece **36** (Fig. M). Use of these clamps **37** ensure that the guide rail **35** is securely attached to the workpiece **36** for safe working. Once the guide rail is set to the cut line and securely fixed to the workpiece, there is no movement during cutting.

IMPORTANT: The height scale on the unit is set for using the saw without a guide rail. When using the saw on the guide rail the difference in height will be approximately 5.0 mm.

Setting the Circular Saw To the Guide Rail (Fig. A, N)

The clearance between the circular saw and the guide rail (Fig. N, **35**) must be very small to achieve best cutting results. The smaller this clearance the better the straight line finish will be on the workpiece.

The clearance can be set with the two rail adjusters **19**, **20** (Fig. A) for each channel in the base for 0 ° cutting **19** and for 1–45 ° bevel cutting **20**. The rail adjusters are precision cams that allow for the reduction of clearance between the unit and guide rail. Once these adjusters have been set, sideways movement of the saw during cutting is kept to a minimum while allowing a smooth cutting action.

NOTE: The adjusters are set to minimum clearance in the factory and may need adjusting and setting before the unit is used. Use the following instructions for setting the circular saw to the guide rail.

REMEMBER: Set the rail adjusters on the saw to the guide rail.

Магазин ТОП МАСТЕРА
Продажа инструмента

1. Undo the screw inside the rail adjuster to allow for adjustment between the saw and the guide rail.
2. Retract the lower guard and place the unit on the guide rail, ensuring the blade is in the highest position.
3. Rotate the adjuster until saw locks on guide rail.
   IMPORTANT: Make sure the saw is securely attached to the rail by trying to push the saw forward. Ensure there is no movement of the saw.
4. Rotate the adjuster back slightly until saw slides easily along the rail.
5. Hold the rail adjuster in position and tighten the screw again.

NOTE: ALWAYS adjust the system for use with other rails.

The rail adjusters are now set up to minimise sideways deviation when cutting with the saw on the guide rail.

Before using the saw, the anti-splinter guard **38** on the guide rail will need tuning in. Refer to ***Tuning the Anti-Splinter Guard***.

Tuning the Anti-Splinter Guard (Fig. N)

The guide rail **35** is equipped with an anti-splinter guard **38** that has to be tuned to the saw before the first use.

The anti-splinter guard **38** is situated on each edge of the guide rail (Fig. N). The purpose of this anti-splinter guard is to provide the user with a visible blade cut line while reducing the chipping that occurs along the workpiece cut edge during cutting.

IMPORTANT: ALWAYS read and follow the ***Setting the Circular Saw to the Guide Rail*** before cutting the splinter guard!

Steps to Tune the Anti-Splinter Guard (Fig. O–R)

1. Place the guide rail **35** on a scrap piece of wood **39** with a minimum length of 100 mm overhanging the workpiece (Fig. O). Use a clamp to ensure that the guide rail is securely attached to the workpiece. This will ensure accuracy.
2. Set the unit to a 20 mm depth of cut.
3. Place the front of the saw on the overhang end of the guide rail, making sure that the blade is positioned in front of the rail edge (Fig. P).
4. Turn the saw on and slowly cut the splinter guard along the full length of the rail in one continuous operation. The edge of the splinter guard now corresponds exactly to the cutting edge of the blade (Fig. Q).

To tune in the anti-splinter guard on the other side of the guide rail, remove the saw from the rail and rotate the rail 180 °. Repeat steps 1 through 4.

NOTE: If desired, the splinter guard can be bevelled to 45 °, then repeat steps 1 through 4. This allows one side of the rail for cutting parallel cuts and the other side of the rail is tuned in for 45 ° bevel cuts (Fig. R).

NOTE: If the anti-splinter guard is tuned in for parallel cutting on both sides, then when the unit is bevelled, the blade will not run true to the edge of the anti-splinter guard. This is because the pivot point of the unit bevel is not stationary and the blade moves out over when the unit is bevelled.

Kerf Indicator (Fig. S–U)

The front of the saw shoe has a kerf indicator **41** for vertical and bevel cutting. This indicator enables you to guide the saw along cutting lines penciled on the material being cut. The kerf indicator lines up with the left (outer) side of the saw blade, which makes the slot or "kerf" cut by the moving blade fall to the right of the indicator. Guide along the penciled cutting line so that the kerf falls into the waste or surplus material. Fig. T shows the saw in the parallel cutting position relative to the guide rail. Fig. U shows the saw in the bevel cutting position relative to the guide rail.

Prior to Operation

- Make sure the guards have been mounted correctly. The saw blade guard must be in closed position.
- Make sure the saw blade rotates in the direction of the arrow on the blade.
- Do not use excessively worn saw blades.

OPERATION

Instructions for Use

WARNING: *Always observe the safety instructions and applicable regulations.*

WARNING: To reduce the risk of serious personal injury, turn tool off and disconnect battery pack before making any adjustments or removing/ installing attachments or accessories. *An accidental start-up can cause injury.*

Proper Hand Position (Fig. V)

WARNING: *To reduce the risk of serious personal injury,* ***ALWAYS*** *use proper hand position as shown.*

WARNING: *To reduce the risk of serious personal injury,* ***ALWAYS*** *hold securely in anticipation of a sudden reaction.*

Proper hand position requires one hand on the main handle **3**, with the other hand on the auxiliary handle **7**.

LED Worklight (Fig. A)

The LED worklight **10** is activated when the trigger switch is depressed. When the trigger is released, the worklight will stay illuminated for up to 20 seconds.

NOTE: The worklight is for lighting the immediate work surface and is not intended to be used as a flashlight.

Switching On and Off (Fig. A)

For safety reasons the trigger switch **1** of your tool is equipped with a lock-off button **2**.

Press the lock-off button to unlock the tool.

To run the tool, press the trigger switch **1**. As soon as the trigger switch is released, the lock-off switch is automatically activated to prevent unintended starting of the machine.

NOTICE: *Do not switch the tool ON or OFF when the saw blade touches the workpiece or other materials.*

МАГАЗИН БАЛТ МАСТОРА ® ИНСТРУМЕНТ

Workpiece Support (Fig. W–Z)

WARNING: To reduce the risk of serious personal injury, support the work properly and hold the saw firmly to prevent loss of control.

Fig. W and Y show proper sawing position. Fig. X and Z show an unsafe condition. Hands should be kept away from cutting.

To avoid kickback, ALWAYS support board or panel NEAR the cut, (Fig. W and Y). DON'T support board or panel away from the cut (Fig. X, Z).

ALWAYS DISCONNECT BATTERY PACK BEFORE MAKING ANY ADJUSTMENTS! Place the work with its "good" side—the one on which appearance is most important—down. The saw cuts upward, so any splintering will be on the work face that is up when you saw it.

Cutting (Fig. Y)

WARNING: *Never attempt to use this tool by resting it upside down on a work surface and bringing the material to the tool. Always securely clamp the workpiece and bring the tool to the workpiece, securely holding the tool with two hands as shown in Fig. Y.*

Place the wider portion of the saw base plate on that part of the work piece which is solidly supported, not on the section that will fall off when the cut is made. As examples, Fig. Y illustrates the RIGHT way to cut off the end of a board. Always clamp work. Don't try to hold short pieces by hand! Remember to support cantilevered and overhanging material. Use caution when sawing material from below.

Be sure saw is up to full speed before blade contacts material to be cut. Starting saw with blade against material to be cut or pushed forward into kerf can result in kickback. Push the saw forward at a speed which allows the blade to cut without laboring. Hardness and toughness can vary even in the same piece of material, and knotty or damp sections can put a heavy load on the saw. When this happens, push the saw more slowly, but hard enough to keep working without much decrease in speed. Forcing the saw can cause rough cuts, inaccuracy, kickback, and over-heating of the motor. Should your cut begin to go off the line, don't try to force it back on. Release the switch and allow blade to come to a complete stop. Then you can withdraw the saw, sight anew, and start a new cut slightly inside the wrong one. In any event, withdraw the saw if you must shift the cut. Forcing a correction inside the cut can stall the saw and lead to kickback.

IF SAW STALLS, RELEASE THE TRIGGER AND BACK THE SAW UNTIL IT IS LOOSE. BE SURE BLADE IS STRAIGHT IN THE CUT AND CLEAR OF THE CUTTING EDGE BEFORE RESTARTING.

As you finish a cut, release the trigger and allow the blade to stop before lifting the saw from the work. As you lift the saw, the spring-tensioned telescoping guard will automatically close under the blade. Remember the blade is exposed until this occurs. Never reach under the work for any reason. When you have to retract the telescoping guard manually (as is necessary for starting pocket cuts) always use the retracting lever.

NOTE: When cutting thin strips, be careful to ensure that small cutoff pieces don't hang up on inside of lower guard.

Pocket Cutting (Fig. AA)

WARNING: *Never tie the blade guard in a raised position. Never move the saw backwards when pocket cutting. This may cause the unit to raise up off the work surface which could cause injury.*

A pocket cut is one that is made in a floor, wall or other flat surface.

1. Adjust the saw base plate so the blade cuts at desired depth.
2. Tilt the saw forward and rest front of the base plate on material to be cut.
3. Using the lower guard lever, retract lower blade guard to an upward position. Lower rear of base plate until blade teeth almost touch cutting line.
4. Release the blade guard (its contact with the work will keep it in position to open freely as you start the cut). Remove hand from guard lever and firmly grip auxiliary handle **7**, as shown in Fig. AA. Position your body and arm to allow you to resist kickback if it occurs.
5. Make sure blade is not in contact with cutting surface before starting saw.
6. Start the motor and gradually lower the saw until its base plate rests flat on the material to be cut. Advance saw along the cutting line until cut is completed.
7. Release trigger and allow blade to stop completely before withdrawing the blade from the material.
8. When starting each new cut, repeat as above.

Dust Extraction (Fig. DD)

WARNING: *Risk of dust inhalation. To reduce the risk of personal injury,* ***ALWAYS*** *wear an approved dust mask.*

A dust extraction port **34** is supplied with your tool.

The dust extraction port allows you to connect the tool to an external dust extractor, either using the AirLock™ system (DWV9000-XJ), or a standard 35 mm dust extractor fitment.

WARNING: ALWAYS *use a vacuum extractor designed in compliance with the applicable directives regarding dust emission when sawing wood. Vacuum hoses of most common vacuum cleaners will fit directly into the dust extraction outlet.*

Rafter Hook (Fig. A) (Included with some models)

WARNING: *To reduce the risk of serious personal injury, do not use the tool's rafter hook to hang the tool from your body. DO NOT use the rafter hook for tethering or securing the tool to a person or object during use. DO NOT suspend tool overhead or suspend objects from the rafter hook.*

WARNING: *To reduce the risk of injury from the circular saw falling on operators or bystanders, make sure it is supported securely when using the rafter hook, or resting in a secure and stable location when not in use. Be sure to keep the area below clear to reduce the risk of the tool or off-cut material falling and striking someone or something below.*

ПРОДАЖА ЗАПЧАСТИ МАЙСТОРА ПОСЛУГИ РЕМОНТ РЕМОНТ

The circular saw has a convenient rafter hook **4** that allows it to hang on a suitable, stable structure between uses. The rafter hook is not for tethering or securing the tool to a person or object during use when elevated.

MAINTENANCE

Your power tool has been designed to operate over a long period of time with a minimum of maintenance. Continuous satisfactory operation depends upon proper tool care and regular cleaning.

WARNING: To reduce the risk of serious personal injury, turn tool off and disconnect battery pack before making any adjustments or removing/ installing attachments or accessories. *An accidental start-up can cause injury.*

The charger and battery pack are not serviceable.

Lubrication

Self lubricating ball and roller bearings are used in the tool and relubrication is not required. However, it is recommended that, once a year, you take or send the tool to a service centre for a thorough cleaning, inspection and lubrication of the gear case.

Cleaning

WARNING: *Blow dirt and dust out of the main housing with dry air as often as dirt is seen collecting in and around the air vents. Wear approved eye protection and approved dust mask when performing this procedure.*

WARNING: *Never use solvents or other harsh chemicals for cleaning the non-metallic parts of the tool. These chemicals may weaken the materials used in these parts. Use a cloth dampened only with water and mild soap. Never let any liquid get inside the tool; never immerse any part of the tool into a liquid.*

Lower Guard

The lower guard should always rotate and close freely from a fully open to fully closed position. Always check for correct operation before cutting by fully opening the guard and letting it close. If the guard closes slowly or not completely, it will need cleaning or servicing. Do not use the saw until it functions correctly. To clean the guard, use dry air or a soft brush to remove all accumulated sawdust or debris from the path of the guard and from around the guard spring. Should this not correct the problem, it will need to be serviced by an authorised service centre.

Base Plate Adjustment (Fig. E, G, H)

Your base plate has been factory set to assure that the blade is perpendicular to the base plate. If after extended use you need to re-align the blade, follow the directions below:

Adjusting for 90 Degree Cuts

1. Return the saw to 0 degrees bevel.
2. Place the saw on its side, and retract the lower guard.
3. Set the depth of cut to 51 mm.
4. Loosen the bevel adjustment lever (**10**, Fig. G). Place a square against the blade and the base plate as shown in Fig. H.
5. Using a hex key, turn the set screw (**38**, Fig. H) on the underside of the base plate until the blade and the base plate are both in flush contact with the square. Retighten the bevel adjustment lever.

Adjusting Bevel Adjustment Lever (Fig. E, G)

It may be desirable to adjust the bevel adjustment lever **10**. It may loosen in time and hit the base plate before tightening.

To Tighten the Lever

1. Hold the bevel adjustment lever **10** and loosen the bevel locknut **32**.
2. Adjust the bevel adjustment lever by rotating it in the desired direction about 1/8 of a revolution.
3. Retighten nut.

Blades

A dull blade will cause inefficient cutting, overload on the saw motor, excessive splintering and increase the possibility of kickback. Change blades when it is no longer easy to push the saw through the cut, when the motor is straining, or when excessive heat is built up in the blade. It is a good practice to keep extra blades on hand so that sharp blades are available for immediate use. Dull blades can be sharpened in most areas.

Hardened gum on the blade can be removed with kerosene, turpentine, or oven cleaner. Anti-stick coated blades can be used in applications where excessive build-up is encountered, such as pressure treated and green lumber.

Optional Accessories

WARNING: *Since accessories, other than those offered by DEWALT, have not been tested with this product, use of such accessories with this tool could be hazardous. To reduce the risk of injury, only DEWALT recommended accessories should be used with this product.*

DO NOT USE WATER FEED ATTACHMENTS WITH THIS SAW.

VISUALLY EXAMINE CARBIDE BLADES BEFORE USE. REPLACE IF DAMAGED.

Consult your dealer for further information on the appropriate accessories.

магазин ALL МАЙСТОРА® професионални решения

Protecting the Environment

Separate collection. Products and batteries marked with this symbol must not be disposed of with normal household waste.

Products and batteries contain materials that can be recovered or recycled reducing the demand for raw materials. Please recycle electrical products and batteries according to local provisions. Further information is available at **www.2helpU.com**.

Rechargeable Battery Pack

This long life battery pack must be recharged when it fails to produce sufficient power on jobs which were easily done before. At the end of its technical life, discard it with due care for our environment:

- Run the battery pack down completely, then remove it from the tool.
- Li-Ion cells are recyclable. Take them to your dealer or a local recycling station. The collected battery packs will be recycled or disposed of properly.

МАГАЗИН БАШ МАЙСТОРА® ПРОФЕСИОНАЛНИ РЕШЕНИЯ