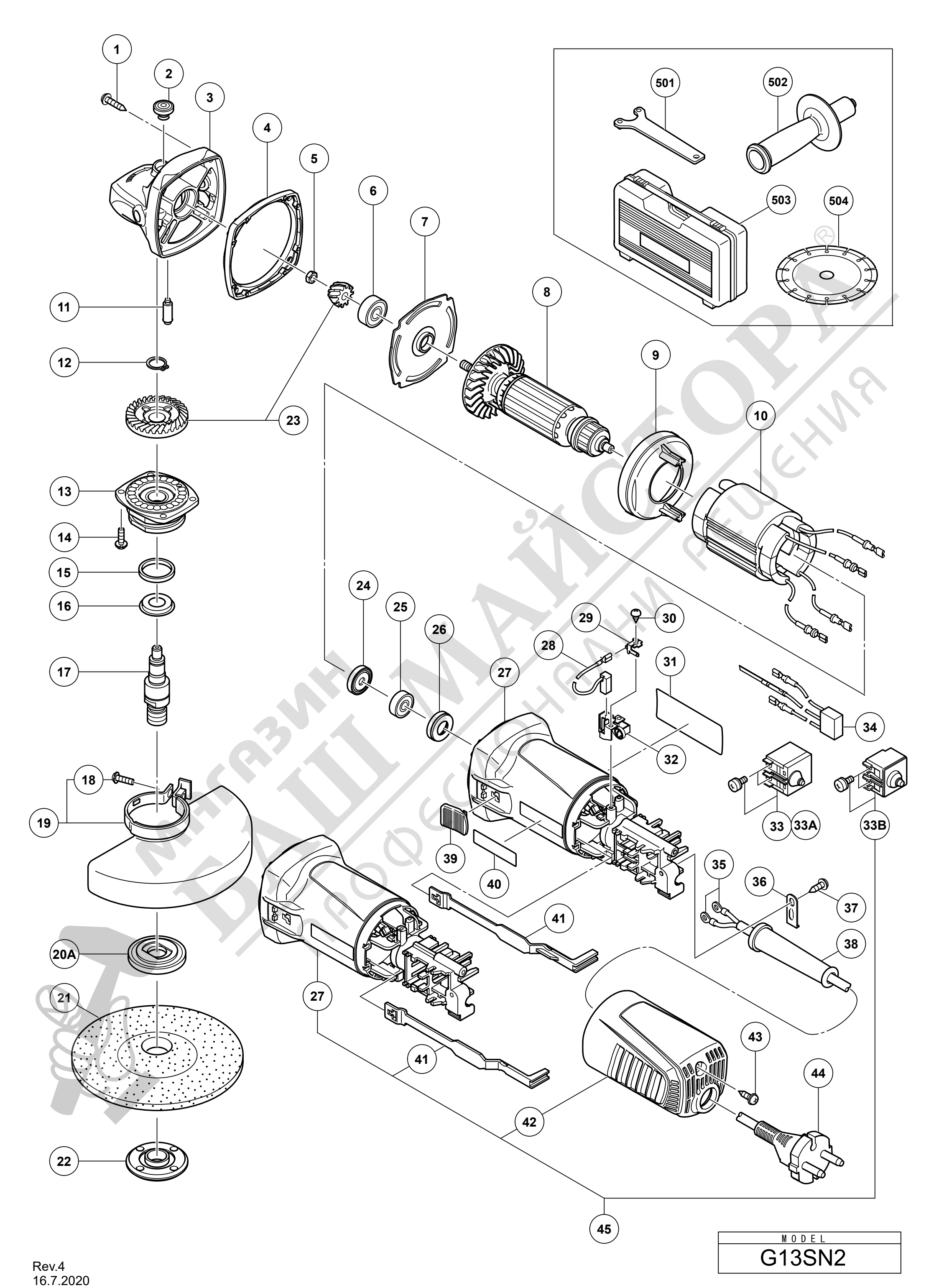

MODEL
G13SN2

Rev.4
16.7.2020

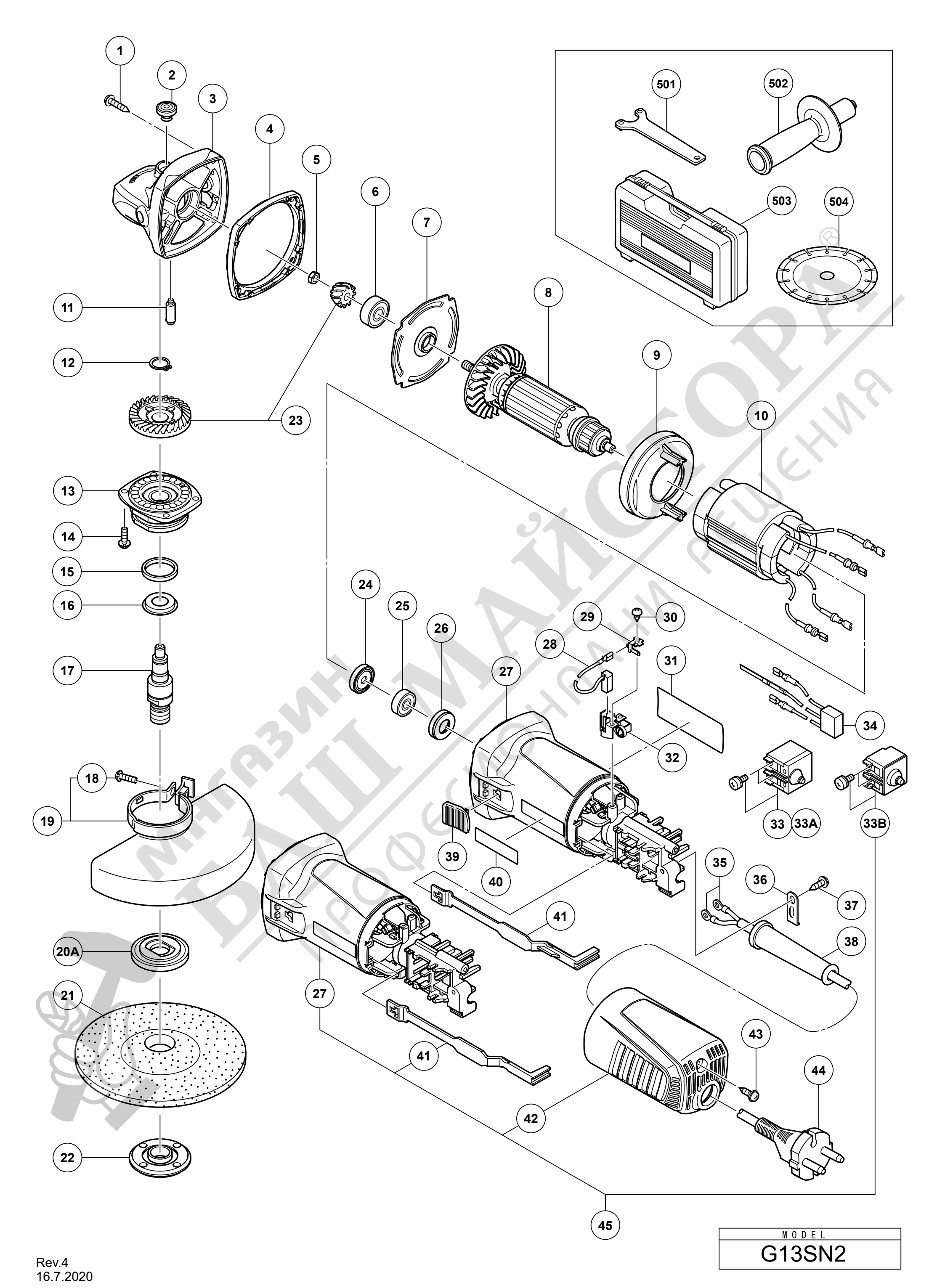

MODEL
G13SN2

Rev.4
16.7.2020