Husqvarna

# SPARE PARTS LIST

## TROWELS

## CT36-8A-V EU, 970465511, 2020-02

магазин БАШ МАЙСТОРА® ПРОФЕСИОНАЛНИ РЕШЕНИЯ

**A** CT36-8A-V EU
HANDLE, LOWER

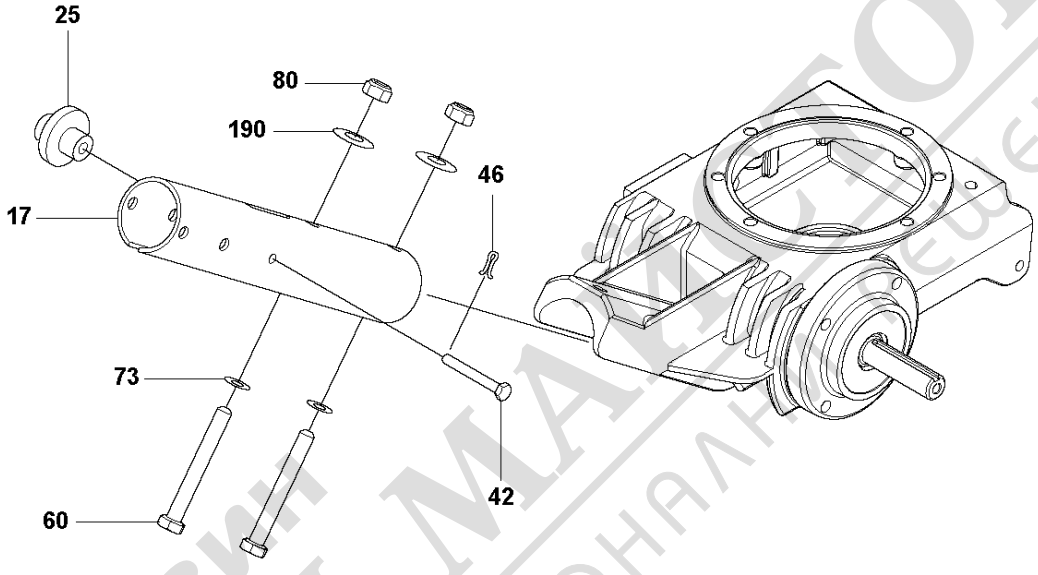


магазин БАШ МАЙСТОРА® професионални машини

| Ref | Part No | Description | Remark | QTY KIT |
|---|---|---|---|---|
| 17 | 599 00 24-01 | PIPE | | 1 |
| 25 | 599 17 15-01 | PULLEY | | 1 |
| 42 | 599 16 80-01 | PIN | CLEVIS PIN 1/4x2-3/8in | 1 |
| 46 | 599 16 43-01 | PIN | COTTER PIN 1,6x16, DIN 94 | 1 |
| 60 | 599 16 04-01 | SCREW | M10x85, ISO4014, 49Nm/36ft.lbs | 2 |
| 73 | 734 11 72-01 | WASHER | M10, 200HV, A2K, DIN125B | 2 |
| 80 | 732 21 20-51 | NUT | M10, DIN985 | 2 |
| 190 | 599 15 99-01 | WASHER | M10, A2K, ISO 7093 | 2 |

МАГАЗИН БАШ МАЙСТОРА ПРОФЕСИОНАЛНИ РЕШЕНИЯ

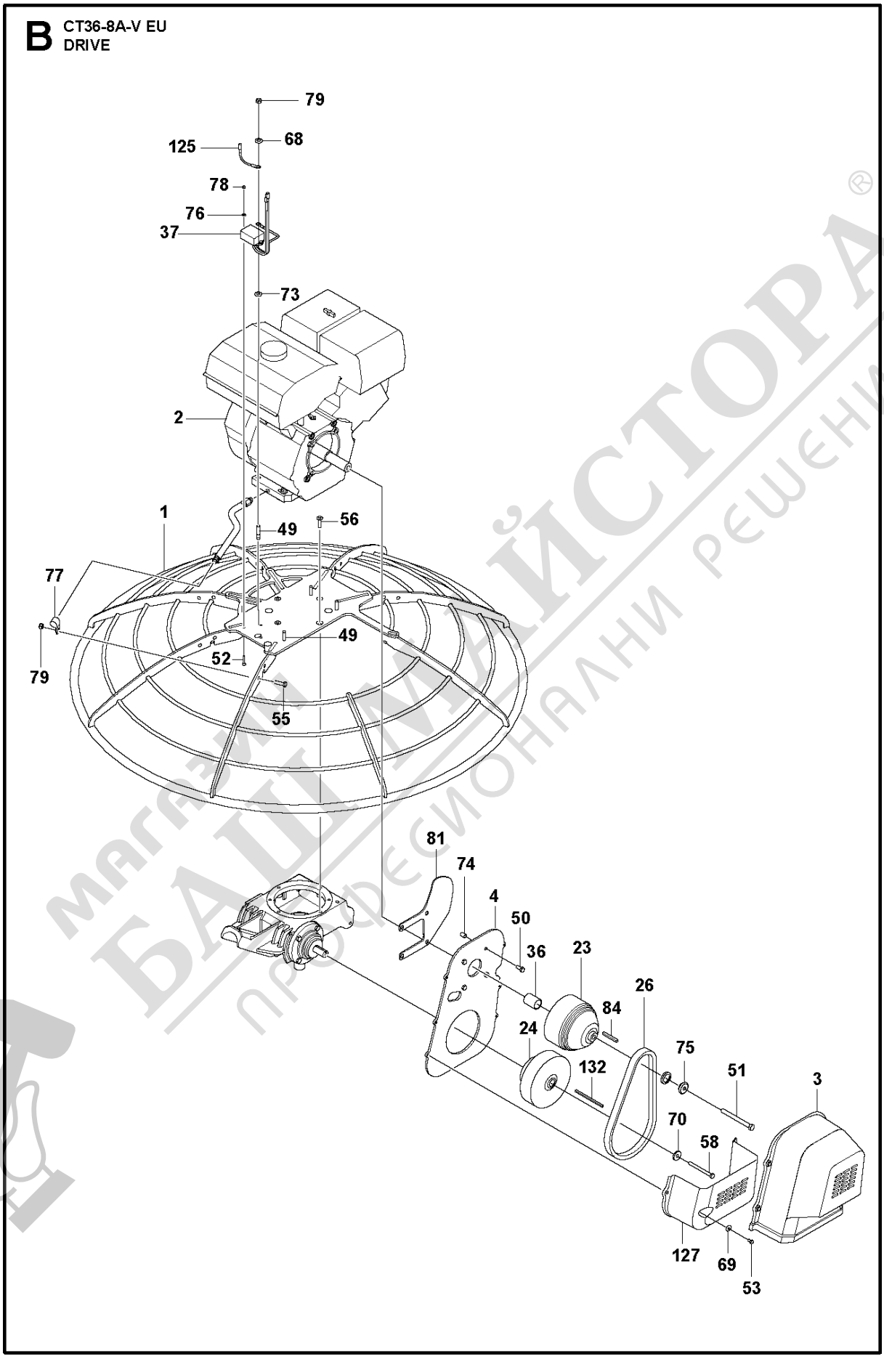


магазин БАШМАЙСТОРА® професионални решения

| Ref | Part No | Description | Remark | QTY KIT |
|---|---|---|---|---|
| 1 | 599 08 36-01 | RING | | 1 |
| 2 | 599 10 19-01 | ENGINE | 8hp | 1 |
| 3 | 599 13 16-02 | BELT GUARD | | 1 |
| 4 | 599 06 37-01 | PLATE | | 1 |
| 23 | 599 06 33-01 | CLUTCH | 3/4in | 1 |
| 24 | 599 06 34-01 | CLUTCH | | 1 |
| 26 | 599 06 26-01 | BELT | | 1 |
| 36 | 599 06 32-01 | SPACER | | 1 |
| 37 | 599 06 98-01 | CONTROL | | 1 |
| 49 | 599 17 02-01 | STUD | | 4 |
| 50 | 599 16 25-01 | SCREW | 5/16-24 x 1-1/4in18Nm/13ft.lbs, DIN933 | 4 |
| 51 | 599 17 51-01 | SCREW | 3/8in x 24 x 5,5 | 1 |
| 52 | 725 22 95-71 | SCREW EHHM | M4 x 203Nm/2ft.lbs | 2 |
| 53 | 596 32 01-01 | BOLT | M6 x 1010Nm/7ft.lbs | 6 |
| 55 | 725 24 53-71 | SCREW EHHM | M8 x 2525Nm/18ft.lbs | 1 |
| 56 | 599 16 20-01 | SCREW | M8 x 3025Nm/18ft.lbs, DIN933 | 4 |
| 58 | 725 24 66-51 | SCREW | M8 x 1,25 x 75 | 1 |
| 68 | 599 16 19-01 | LOCKWASHER | 8, DIN6796 | 4 |
| 69 | 734 11 54-41 | WASHER | 6, ISO7093 | 6 |
| 70 | 599 06 35-01 | WASHER | | 1 |
| 73 | 734 11 72-01 | WASHER | | 1 |
| 74 | 599 06 31-01 | SPACER | | 4 |
| 75 | 734 11 78-01 | WASHER | 12, ISO7090 | 1 |
| 76 | 734 11 46-01 | WASHER | | 2 |
| 77 | 599 00 14-01 | CLAMP | | 1 |
| 78 | 599 15 98-01 | LOCK NUT | | 2 |
| 79 | 522 91 94-01 | LOCK NUT | M8, DIN985 | 4 |
| 81 | 599 01 16-01 | PLATE | | 1 |
| 84 | 599 17 49-01 | KEY | 1/4 x 3/16" | 1 |
| 125 | 599 02 75-01 | WIRING | | 1 |
| 127 | 599 15 96-02 | BELT GUARD | | 1 |
| 132 | 599 17 50-01 | KEY | | 1 |

магазин БАШ МАЙСТОРА® професионални решения

**C** CT36-8A-V EU
BLADE ASSY

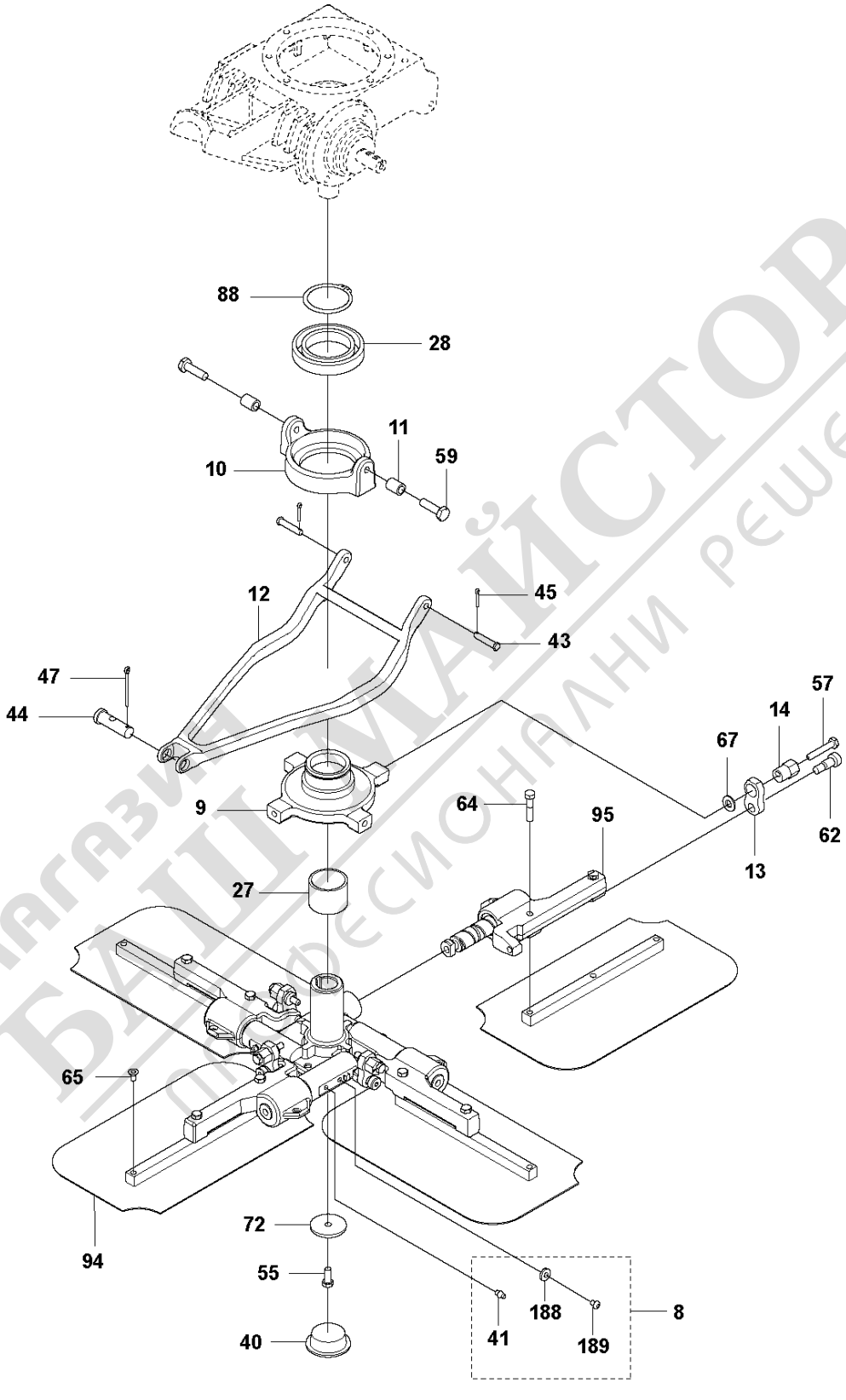


магазин БАШ МАЙСТОРА® професионални решения

| Ref | Part No | Description | Remark | QTY | KIT |
|---|---|---|---|---|---|
| 8 | 599 41 81-01 | KIT | | 1 | |
| 9 | 599 04 07-01 | RING | | 1 | |
| 10 | 598 99 63-01 | HOLDER | | 1 | |
| 11 | 599 04 81-01 | TUBE | | 2 | |
| 12 | 599 00 07-01 | YOKE | | 1 | |
| 13 | 599 01 14-01 | LINK | | 4 | |
| 14 | 599 01 09-01 | EXCENTER | | 4 | |
| 27 | 598 98 72-01 | BEARING | 46MM ID | 1 | |
| 28 | 598 99 67-01 | BEARING | 6012-2NSE | 1 | |
| 40 | 598 98 73-01 | PLUG | #W20,TAPER,PLAST. RED | 1 | |
| 41 | 599 17 66-01 | FITTING | AM6, DIN71412 | 4 | 8 |
| 43 | 599 16 31-01 | PIN | 5/16x1 - 1/2" | 2 | |
| 44 | 599 16 86-01 | PIN | | 1 | |
| 45 | 599 16 14-01 | PIN | 1/8 x 3/4" | 2 | |
| 47 | 599 16 36-01 | PIN | 1/8 x 1-1/4" | 1 | |
| 55 | 725 24 53-71 | SCREW EHHM | M8x25, ISO4017, 25Nm/18ft.lbs | 1 | |
| 57 | 599 16 59-01 | SCREW | M8x45, 41Nm/30ft.lbs | 4 | |
| 59 | 599 17 34-01 | SCREW | M10x25, 12.9 | 2 | |
| 62 | 599 16 97-01 | SCREW | M10x12x16, 25Nm/18ft.lbs | 4 | |
| 64 | 599 16 71-01 | SCREW | 5/16-18 x 1-5/8" | 8 | |
| 65 | 599 16 34-01 | PLUG | #1,TAPERED,PLASTC,RED | 4 | |
| 67 | 734 11 65-41 | WASHER | 8.4x24x2, ISO7093, ZPB | 4 | |
| 72 | 599 16 29-01 | WASHER | | 1 | |
| 88 | 599 16 23-01 | RETAINER RING | 60x2, DIN471 | 1 | |
| 94 | 598 92 95-02 | BLADE SET | 36" | 1 | |
| 95 | 599 41 43-01 | MOUNT | | 4 | |
| 188 | 576 82 31-01 | WASHER | M6,4 | 4 | 8 |
| 189 | 599 17 42-01 | SCREW | M6x8, 10.9 | 4 | 8 |

магазин БАШ МАЙСТОРА® професионални решения

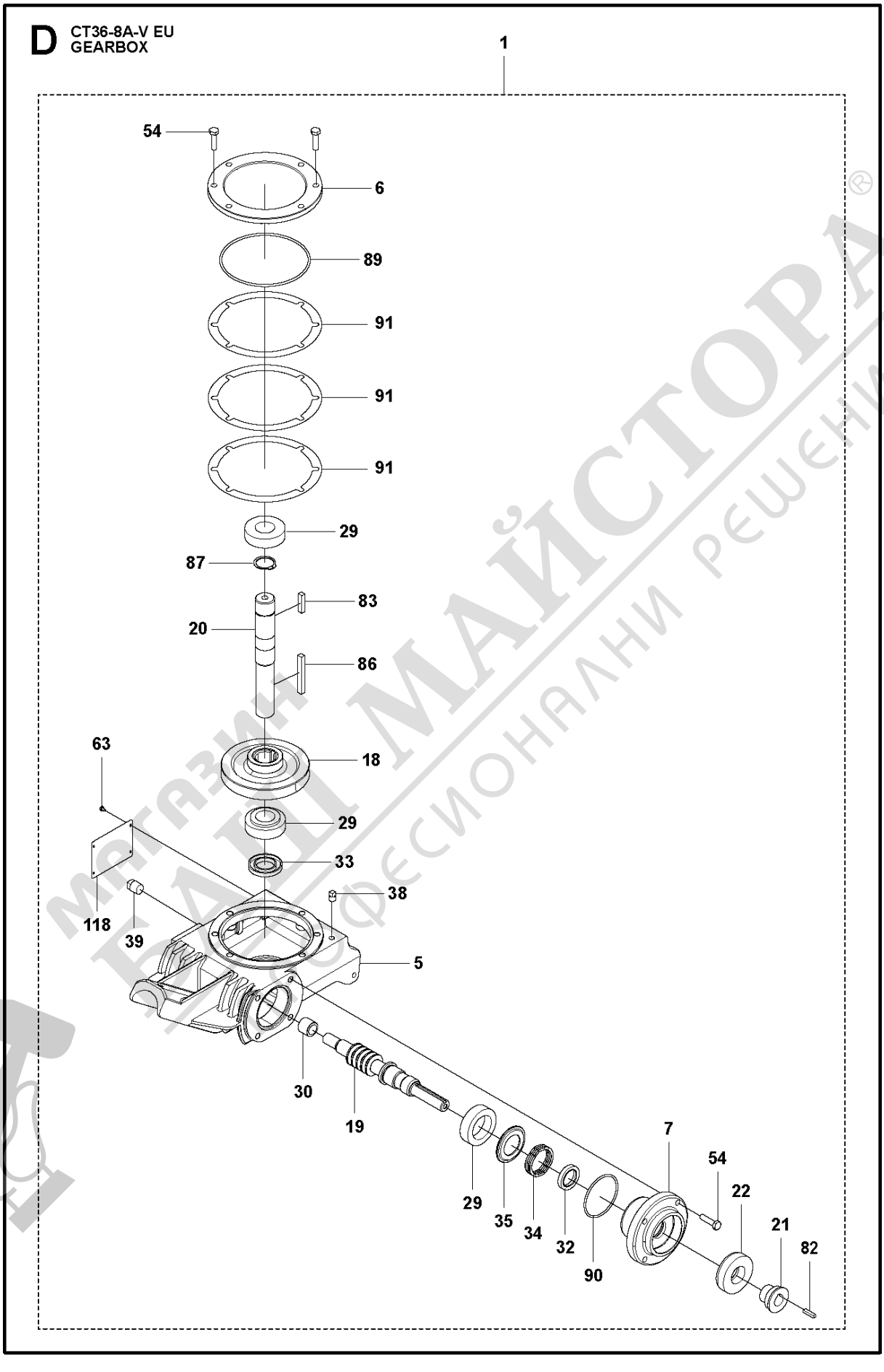


МАГАЗИН БАЩ МАЙСТОРА ПРОФЕСИОНАЛНИ РЕШЕНИЯ

| Ref | Part No | Description | Remark | QTY | KIT |
|---|---|---|---|---|---|
| 1 | 599 41 82-01 | GEARBOX | | 1 | |
| 5 | 599 01 83-01 | GEARBOX | | 1 | 1 |
| 6 | 598 99 84-01 | COVER | | 1 | 1 |
| 7 | 599 00 80-01 | COVER | | 1 | 1 |
| 18 | 599 00 16-01 | GEAR | | 1 | 1 |
| 19 | 599 01 84-01 | SHAFT | | 1 | 1 |
| 20 | 599 05 22-01 | SHAFT | | 1 | 1 |
| 21 | 599 02 53-01 | BRAKE | | 1 | 1 |
| 22 | 599 02 54-01 | BRAKE | | 1 | 1 |
| 29 | 599 00 32-01 | BEARING | | 3 | 1 |
| 30 | 599 01 85-01 | BEARING | | 1 | 1 |
| 32 | 599 01 04-01 | SEAL | 28x40x7 VTF | 1 | 1 |
| 33 | 599 01 05-01 | SEAL | 30x52x7 VTF | 1 | 1 |
| 34 | 599 01 03-01 | SPRING | | 1 | 1 |
| 35 | 599 00 31-01 | SPACER | | 1 | 1 |
| 38 | 599 41 67-01 | VALVE | | 1 | 1 |
| 39 | 599 41 71-01 | PLUG | 3/8 NPTF | 1 | 1 |
| 54 | 725 24 55-51 | SCREW | M8x30, ISO4017, 8.8, ZPB, 25Nm/18ft.lbs | 6 | 1 |
| 63 | 599 17 67-01 | SCREW | 3-48x5/32 | 4 | 1 |
| 82 | 599 17 00-01 | KEY | | 1 | 1 |
| 83 | 599 17 01-01 | KEY | | 1 | 1 |
| 86 | 599 16 69-01 | KEY | 8x7x70 | 1 | 1 |
| 87 | 599 17 65-01 | RETAINER RING | 30x1,5, DIN471 | 1 | 1 |
| 89 | 599 00 94-01 | O-RING | 3,5x138 | 1 | 1 |
| 90 | 599 01 86-01 | O-RING | 3x67 | 1 | 1 |
| 91 | 599 41 86-01 | SHIM | | 1 | 1 |
| 118 | 599 01 75-01 | LABEL | | 1 | 1 |

магазин БАШ МАЙСТОРА® ПРОФЕСИОНАЛНИ РЕШЕНИЯ

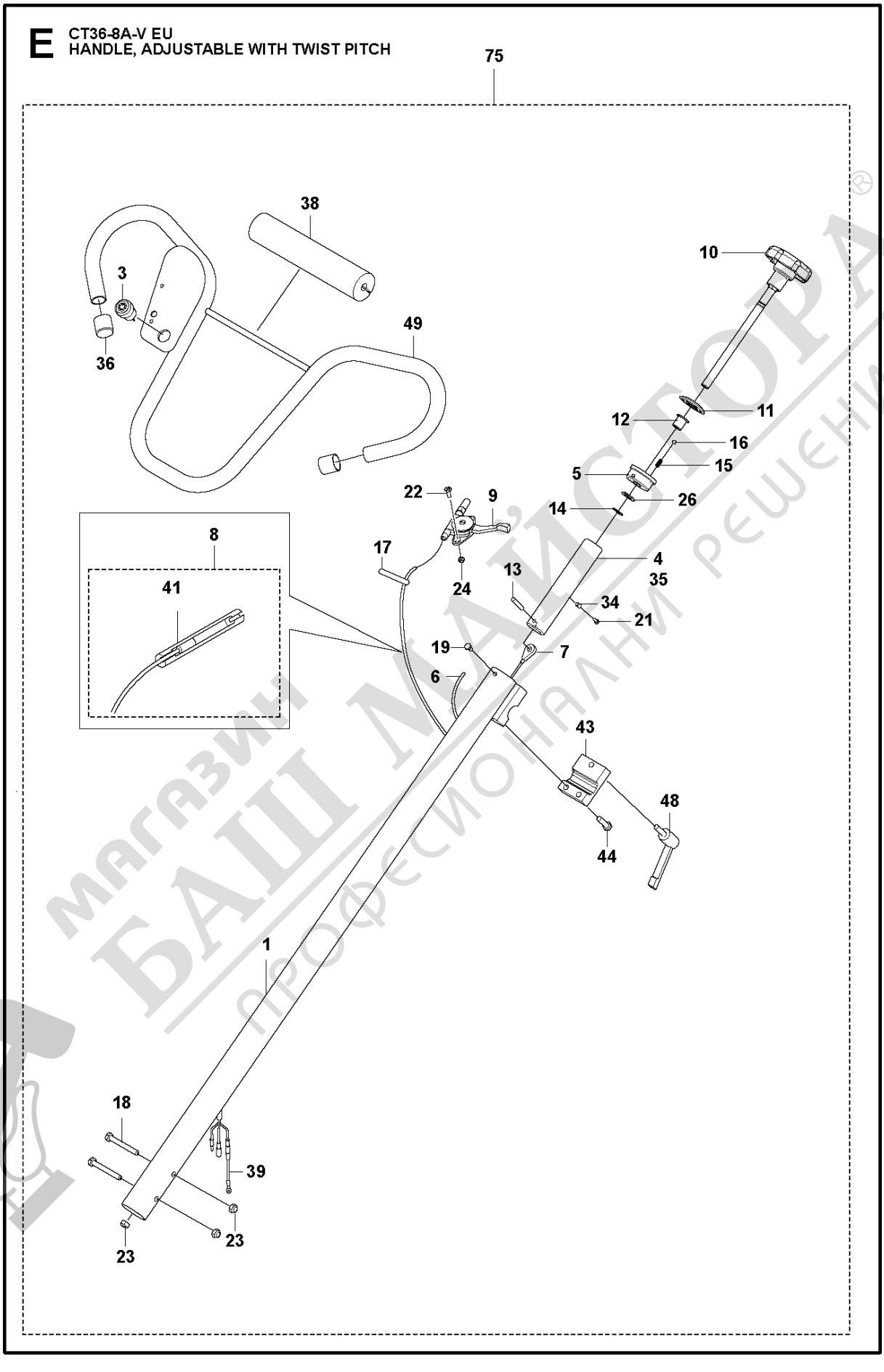


магазин БАШ МАЙСТОРА® професионални решения

| Ref | Part No | Description | Remark | QTY | KIT |
|---|---|---|---|---|---|
| 1 | 599 02 65-01 | HANDLE | | 1 | 75 |
| 3 | 599 08 70-01 | SWITCH | | 1 | 75 |
| 4 | 599 03 79-01 | NUT | | 1 | 75 |
| 5 | 599 00 28-01 | HOLDER | | 1 | 75 |
| 6 | 599 08 69-01 | HARNESS | | 1 | 75 |
| 7 | 599 00 26-01 | CABLE | | 1 | 75 |
| 8 | 599 01 02-01 | CABLE | | 1 | 75 |
| 9 | 599 01 08-01 | LEVER | | 1 | 75 |
| 10 | 599 12 50-01 | KNOB | | 1 | 75 |
| 11 | 599 01 07-01 | PLATE | | 1 | 75 |
| 12 | 599 00 29-01 | BEARING | | 1 | 75 |
| 13 | 599 17 22-01 | PIN | 1/4 x 1-3/8" | 1 | 75 |
| 14 | 599 16 88-01 | RETAINER RING | 9 | 1 | 75 |
| 15 | 599 00 41-01 | SPRING | | 1 | 75 |
| 16 | 599 16 96-01 | BALL | | 1 | 75 |
| 17 | 599 16 22-01 | CABLE | | 2 | |
| 18 | 725 24 64-51 | SCREW EHHM | M8x65, ISO4014, Zn, 25Nm/18ft.lbs | 2 | 75 |
| 19 | 725 23 64-71 | SCREW EHHM | M6x10, ISO4017, 8.8, ZPB, 5Nm/4ft.lbs | 1 | 75 |
| 21 | 599 16 05-01 | SCREW | M4x16, 5Nm/4ft.lbs | 1 | 75 |
| 22 | 599 17 72-01 | SCREW | M5x16 | 2 | 75 |
| 23 | 522 91 94-01 | LOCK NUT | M8, ISO7040, 6H, A2 | 3 | 75 |
| 24 | 732 21 14-01 | LOCK NUT | M5, ISO7040, 6H, A2 | 2 | 75 |
| 26 | 734 11 78-01 | WASHER | M12, 13x24x2.5, ISO7090, 200HV, ZPB | 1 | 75 |
| 34 | 599 03 93-01 | SPACER | 1/4 x 0.17 x 3/8 | 1 | 75 |
| 35 | 599 17 21-01 | SLEEVE | 3/4x2.0x9.0in | 1 | 75 |
| 36 | 599 04 05-01 | CAP | | 2 | 75 |
| 38 | 599 03 85-01 | PAD | | 1 | 75 |
| 39 | 599 02 75-01 | WIRING | | 1 | 75 |
| 41 | 598 98 62-01 | CHEMICAL | 25Nm/18ft.lbs | 1 | 75, 8 |
| 43 | 599 01 89-01 | BLOCK | | 1 | 75 |
| 44 | 725 24 55-51 | SCREW | M8x30, ISO4017, 8.8, ZPB, 25Nm/18ft.lbs | 2 | 75 |
| 48 | 599 03 07-01 | HANDLE | | 1 | 75 |
| 49 | 599 08 65-01 | HANDLE | | 1 | 75 |
| 75 | 598 92 68-08 | HANDLE | Complete | 1 | |

магазин БАШ МАЙСТОРА® професионални решения

**F** **CT36-8A-V EU**
**LIFT BRACKET KIT, LONG**

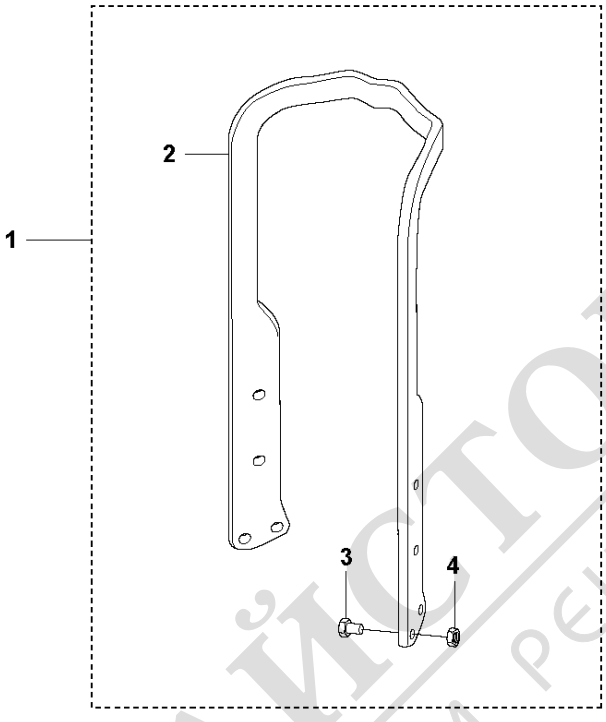


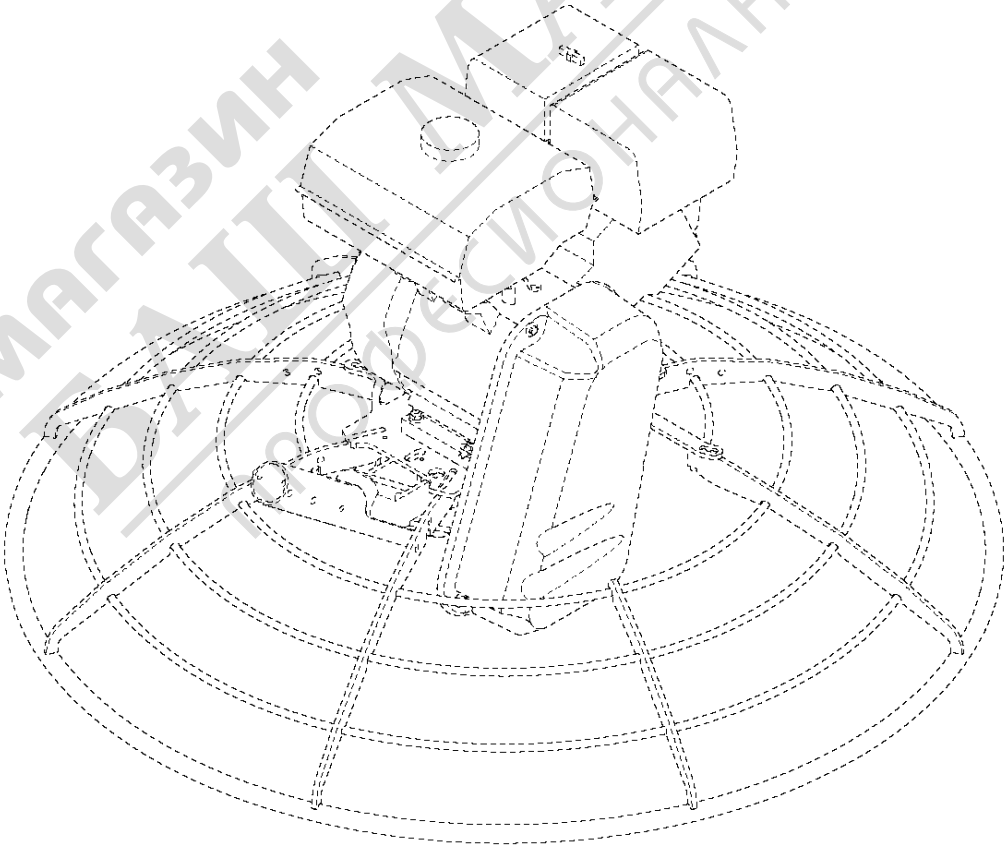

МАГАЗИН БАШ МАЙСТОРА ® ПРОФЕСИОНАЛНИ РЕШЕНИЯ

| Ref | Part No | Description | Remark | QTY | KIT |
|---|---|---|---|---|---|
| 1 | 598 92 73-01 | BRACKET | | 1 | |
| 2 | 599 00 83-01 | BRACKET | 36 | 1 | 1 |
| 3 | 725 24 53-71 | SCREW EHHM | M8 x 2525Nm/18ft.lbs | 4 | 1 |
| 4 | 522 91 94-01 | LOCK NUT | M8, DIN985 | 4 | 1 |

магазин БАШ МАЙСТОРА® ПРОФЕСИОНАЛНИ РЕШЕНИЯ

## G CT36-8A-V EU
## LIFT BRACKET KIT, SHORT

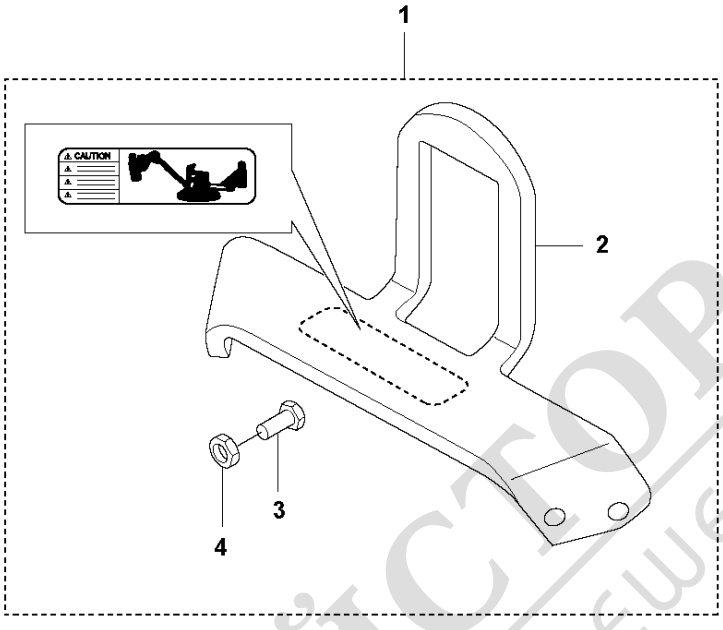


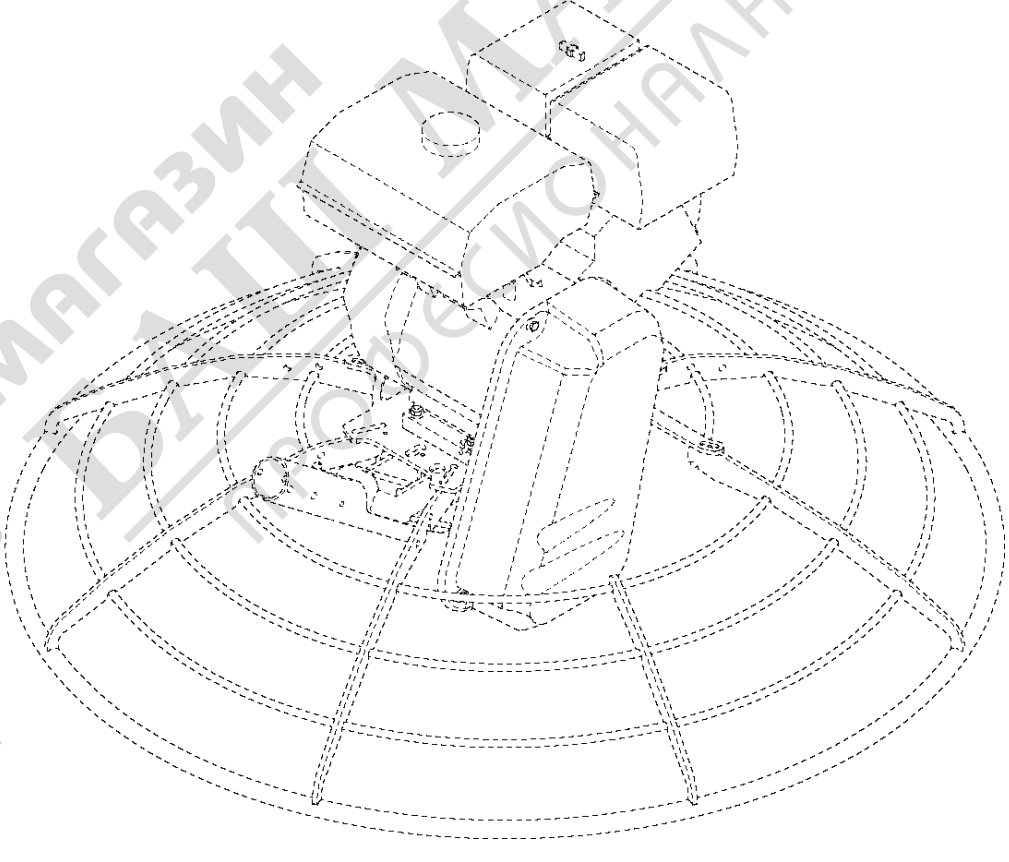

МАГАЗИН ДВИГАТЕЛИ МАЙСТОРА® ПРОФЕСИОНАЛНИ РЕШЕНИЯ

| Ref | Part No | Description | Remark | QTY | KIT |
|---|---|---|---|---|---|
| 1 | 598 92 88-01 | LIFT | 36" | 1 | |
| 2 | 599 22 79-01 | BRACKET | 36" | 1 | 1 |
| 3 | 725 24 53-71 | SCREW EHHM | M8x25, ISO4017, ZPB, 25Nm/18ft.lbs | 4 | 1 |
| 4 | 522 91 94-01 | LOCK NUT | M8, DIN985 | 4 | 1 |

МАГАЗИН БАШ МАЙСТОРА® ПРОФЕСИОНАЛНИ РЕШЕНИЯ

## H CT36-8A-V EU BOTTLE HOLDER KIT

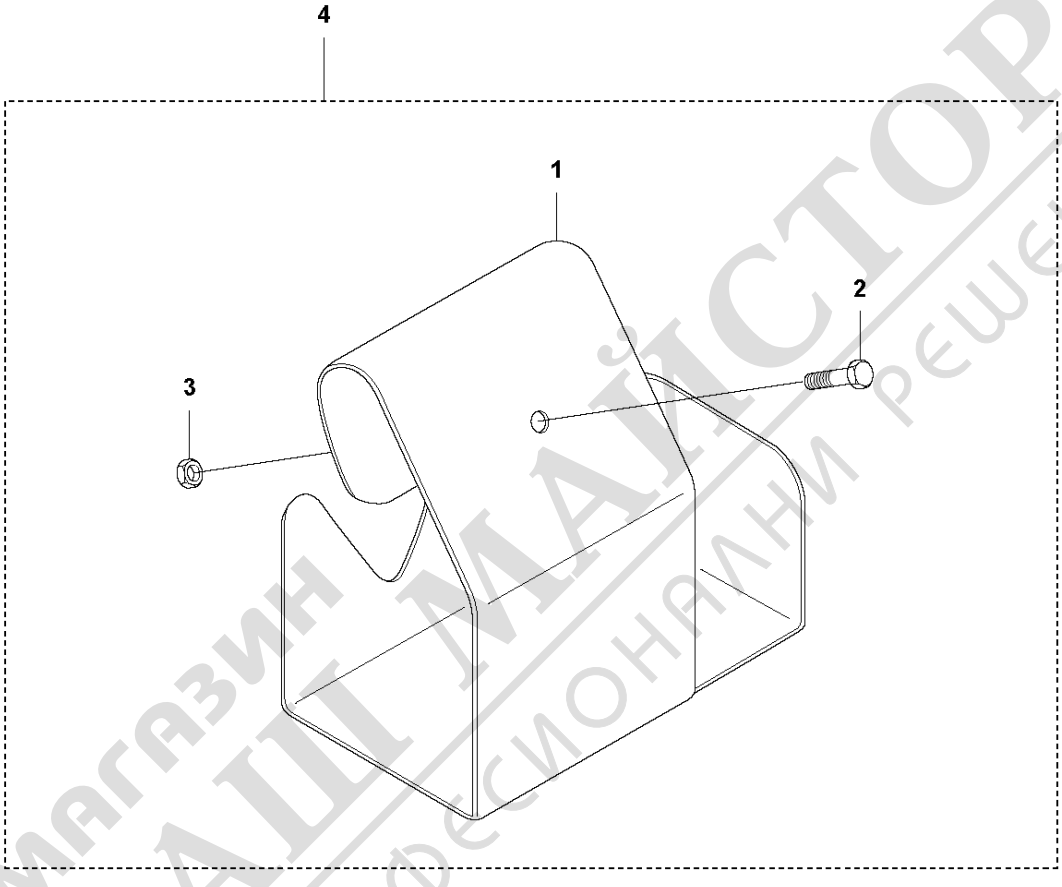


магазин БАШ МАЙСТОРА® професионални решения

| Ref | Part No | Description | Remark | QTY KIT |
|---|---|---|---|---|
| 1 | 599 22 80-01 | BRACKET | | 1 |
| 2 | 725 24 64-51 | SCREW EHHM | M8x65, ISO4014, Zn, 25Nm/18ft.lbs | 2 |
| 3 | 522 91 94-01 | LOCK NUT | M8, ISO7040, 6H, A2 | 2 |
| 4 | 598 92 89-01 | BOTTLE HOLDER | | 1 |

МАГАЗИН БАШ МАЙСТОРА ПРОФЕСИОНАЛНИ РЕШЕНИЯ

**J** CT36-8A-V EU
DECALS

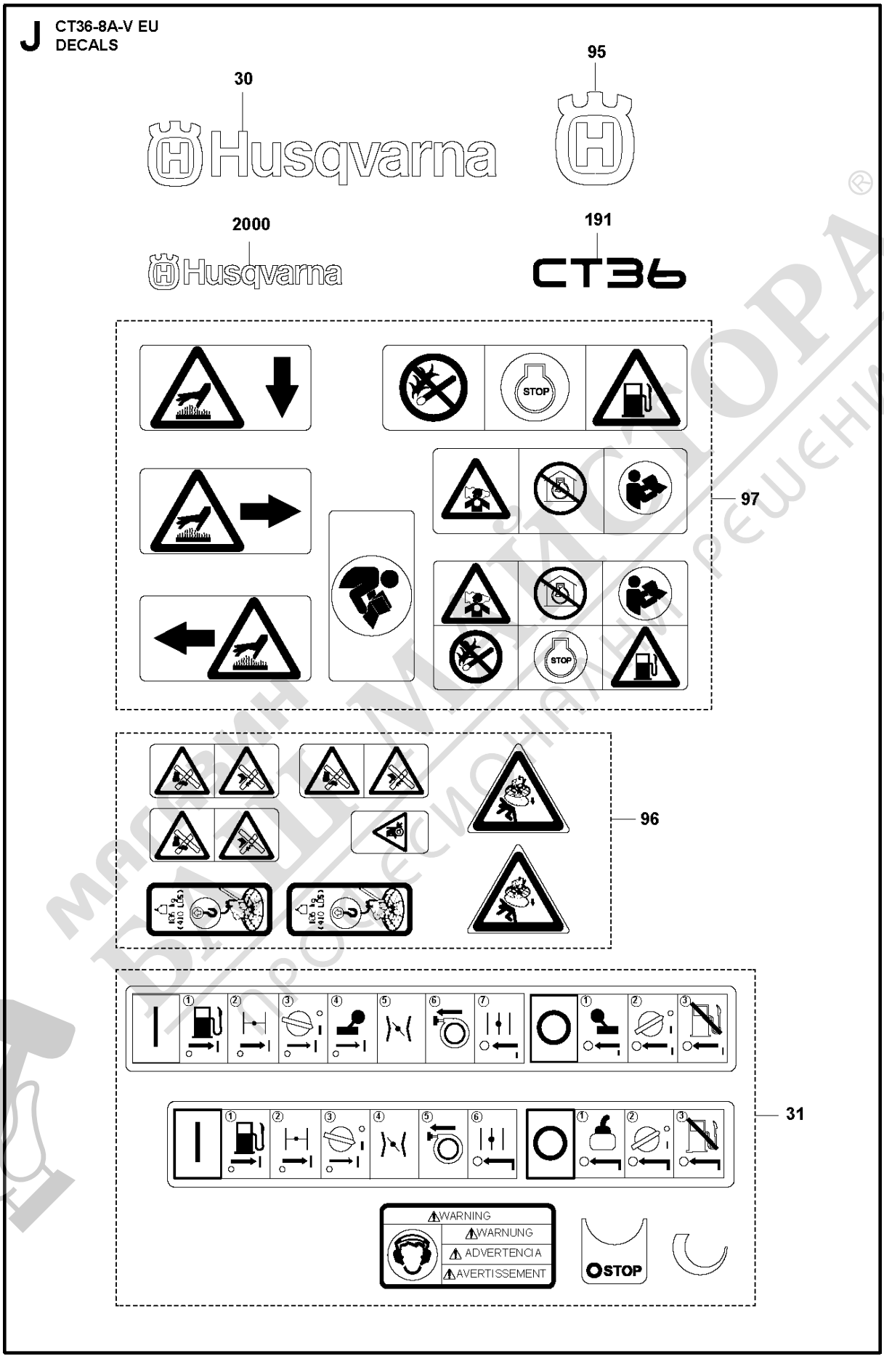


МАГАЗИН ВАШ МАСТОРА
профессиональные решения

| Ref | Part No | Description | Remark | QTY KIT |
|---|---|---|---|---|
| 30 | 599 07 23-01 | LABEL | | 2 |
| 31 | 599 01 21-01 | LABEL | | 1 |
| 95 | 599 07 21-01 | LABEL | | 1 |
| 96 | 599 05 14-01 | LABEL | | 1 |
| 97 | 599 05 13-01 | LABEL | | 1 |
| 191 | 599 04 98-01 | LABEL | | 1 |
| 2000 | 599 23 45-01 | DECAL | | 1 |

магазин БАШ МАЙСТОРА® ПРОФЕСИОНАЛНИ РЕШЕНИЯ