Hitachi Power Tools

LIST NO. K876

ELECTRIC TOOL PARTS LIST

■ CORDLESS DISC GRINDER

2017·12·22

Model G 3613DA

(E1)

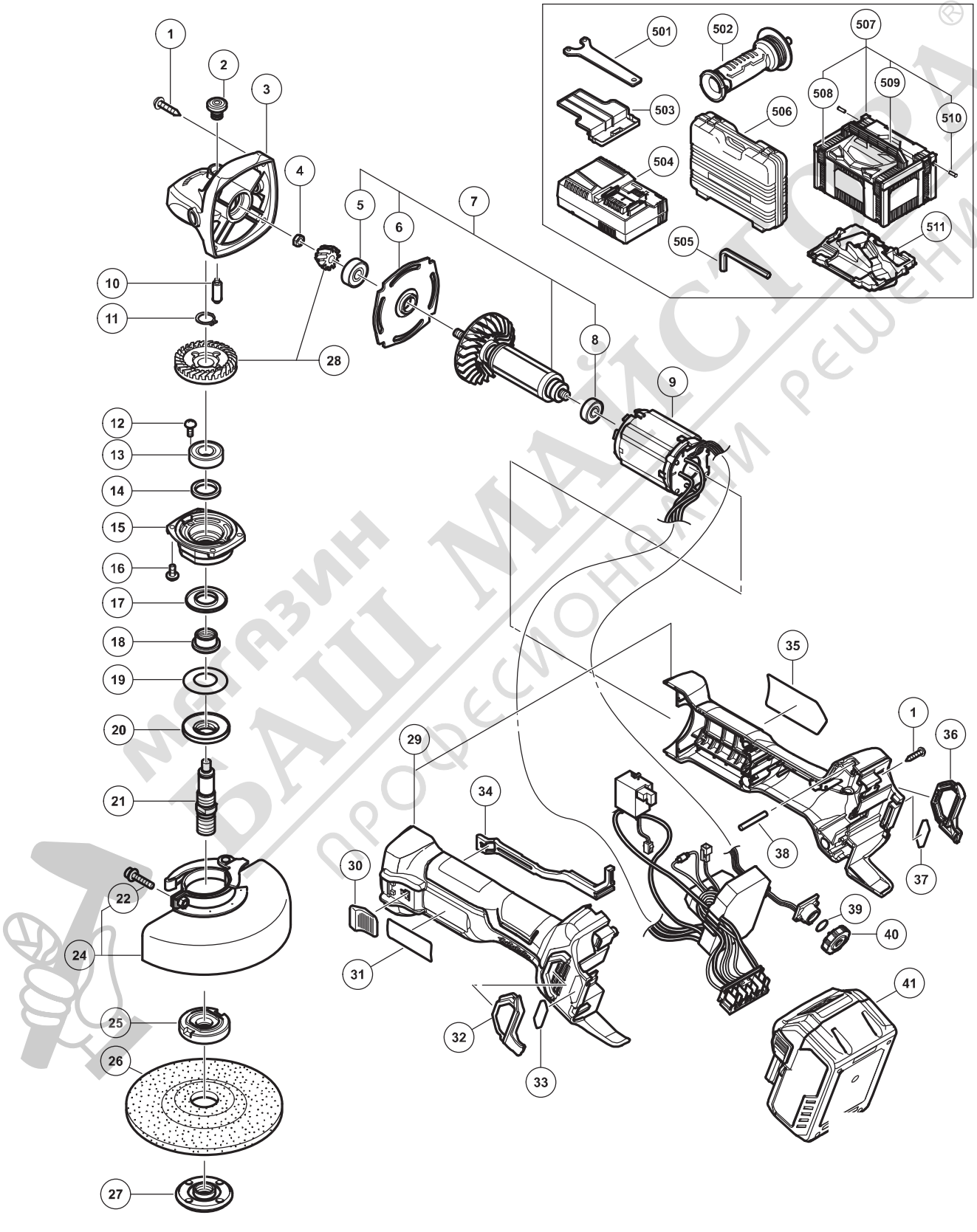

Магазин Ваш Мастер профессиональные решения

ITEM NO.	CODE NO.	DESCRIPTION	NO. USED	REMARKS	
1	328643	TAPPING SCREW (W/FLANGE) D4 X 23 (BLACK)	9		
2	301944	PUSHING BUTTON	1		
3	338332	GEAR COVER ASS'Y	1	INCLUD.2,10	
4	309191	SPECIAL NUT M6	1		
5	338337	BALL BEARING 608SS	1		
6	334940	BEARING HOLDER	1		
7	361075	ROTOR ASS'Y	1	INCLUD.5,6,8	
8	607VVC	BALL BEARING 607VV	1		
9	340986	WIRING SET	1		
10	301943	LOCK PIN	1		
11	939542	RETAINING RING FOR D12 SHAFT (10 PCS.)	1		
12	334942	SLOTTED HD. SCREW (SEAL LOCK) M4	2		
13	6001DD	BALL BEARING 6001DDCMPS2L	1		
14	372126	FELT PACKING	1		
15	372123	PACKING GLAND	1		
16	307127	SEAL LOCK SCREW (W/SP. WASHER) M4 X 12	4		
17	372183	FRINGER	1		
18	371672	SLEEVE (B)	1		
19	371673	BELLEVILLE SPRING (B)	1		
20	371674	SUPPORT BODY (B)	1		
21	373074	SPINDLE (C)	1		
22	316107	HEX. SOCKET HD. BOLT (W/WASHERS) M5 X 20	1		
24	337231	WHEEL GUARD ASS'Y (TOOLLESS TYPE)	1	INCLUD.22	
25	371677	WHEEL WASHER (C)	1		
26	316822	D. C. WHEELS 125MM A36Q (25 PCS.)	1		
27	339579	WHEEL NUT M14	1		
28	338338	GEAR AND PINION SET	1		
29	372105	HOUSING (A).(B) SET	1		
30	314428	SLIDE KNOB	1		
31		BRAND LABEL	1		
32	372107	FILTER (A)	1		
33		MV LABEL (A)	1		
34	372106	SLIDE BAR	1		
35		NAME PLATE	1		
36	372108	FILTER (B)	1		
37		MV LABEL (B)	1		
38	338869	PIN	1		
39	987105	O-RING (S-10)	1		
40	372109	DIAL	1		
41	371750	BATTERY BSL 36A18 (EUROPE,AUS,NZL)	2	INCLUD.503	

МАЙСТОРА ПРОФЕСИОНАЛНИ РЕШЕНИЯ

STANDARD ACCESSORIES

G 3613DA

	ITEM NO.	CODE NO.	DESCRIPTION	NO. USED	REMARKS	
	501	938332Z	WRENCH	1		
	502	336865	SIDE HANDLE	1		
	503	329897	BATTERY COVER	2		
	504		CHARGER (MODEL UC 18YSL3)	1		
	505	944458	HEX. BAR WRENCH 4MM	1		
*	506	372211	CASE	1	FOR CHN	
*	507	337108	CASE ASS'Y (STACKABLE 3)	1	INCLUD.508-510 FOR EUROPE,RUS	
*	508	336472	LATCH	4	FOR EUROPE,RUS	
*	509	336473	HANDLE	1	FOR EUROPE,RUS	
*	510	336474	HINGE	2	FOR EUROPE,RUS	
*	511	373070	INNER TRAY	1	FOR EUROPE,RUS	

МАГАЗИН БАШ МАЙСТОРА ПРОФЕСИОНАЛНИ РЕШЕНИЯ

*ALTERNATIVE PARTS

Printed in Japan
(171222N)