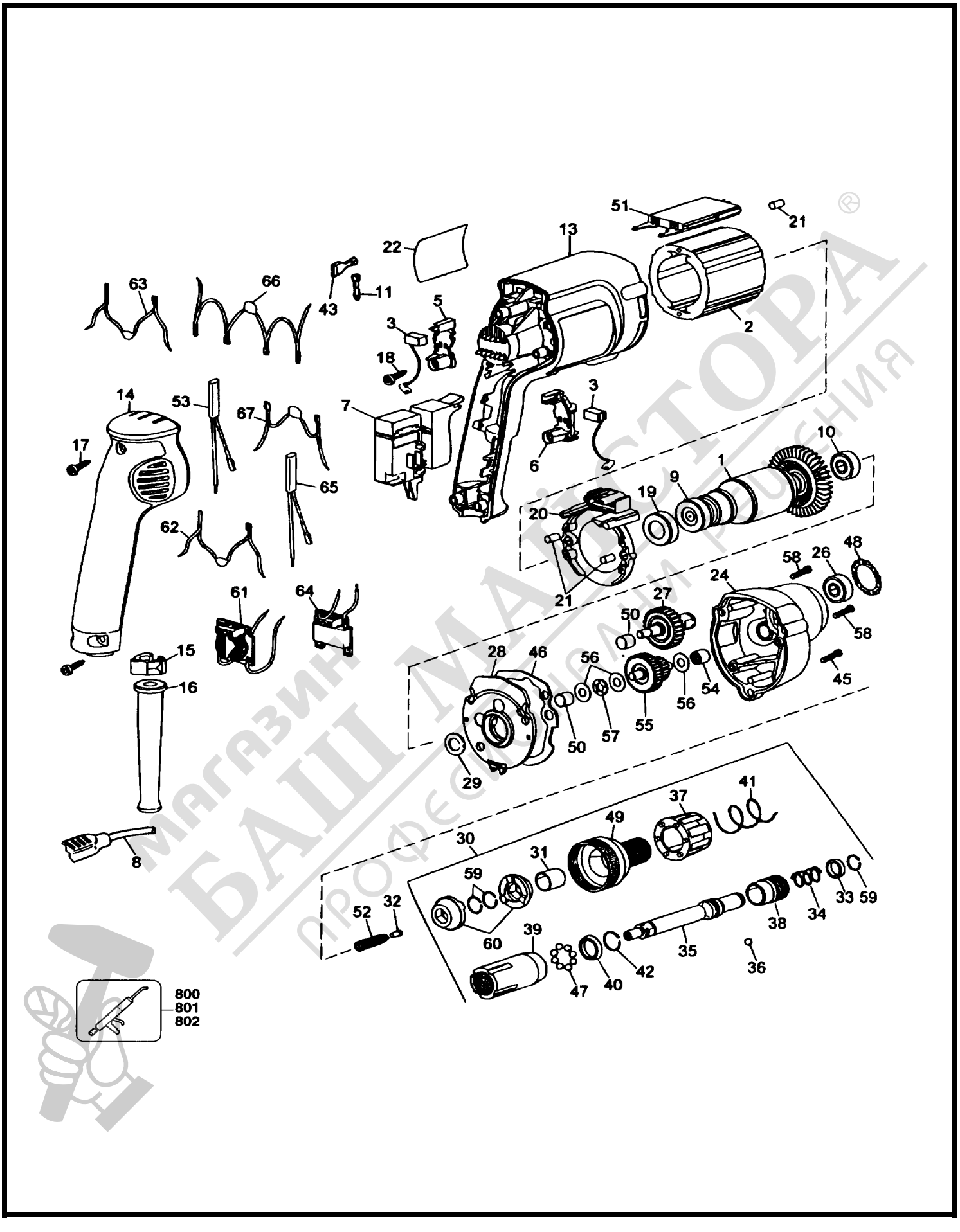DW268K SCREWDRIVER 1