Model No.DHP482 CORDLESS HAMMER DRIVER DRILL

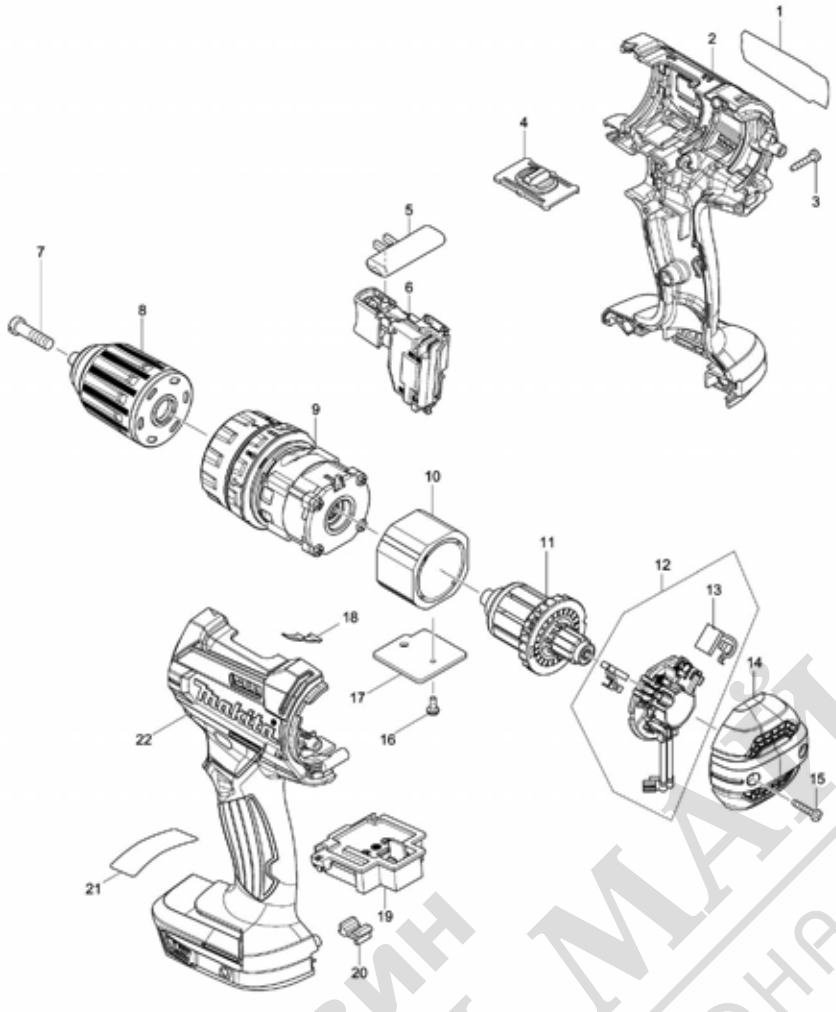

2015/03
DHP482

магазин БАШ МАЙСТОРА® ПРОФЕСИОНАЛНИ РЕШЕНИЯ

Model No.DHP482 CORDLESS HAMMER DRIVER DRILL

Артикул	Номер на частта	Описание	Смяна	Количество	New/Old	Продажба	Покупка	Забележка
001	851E32-8	DHP482 NAME PLATE		1				
002	183B65-0	HOUSING SET		1				
C10	263005-3	ЩИФТ ГУМЕН 6		2				
D10		INC. 22						
003	266429-2	TAPPING SCREW 3X16		9				
004	123442-2	SPEED CHANGE LEVER ASSEMBLY		1				
C10	233438-6	ПРУЖИНА ПРИТИСКАЩА 4		2				
005	419041-9	ПРЕВКЛЮЧВАТЕЛ РЕВЕРСИВЕН		1				
006	632F27-4	SWITCH UNIT		1				
C10	620444-4	LED CIRCUIT		1				
C20	688172-7	LINE FILTER		1				
007	251468-5	- ВИНТ С ПЛОСКА ГЛАВА M6x22		1				
008	766027-7	KEYLESS DRILL CHUCK 13		1				
009	123443-0	GEAR ASSEMBLY		1				
010C	632F32-1	YOKE UNIT		1	*			
010D	632F32-1	YOKE UNIT		1	*			
010E	632F32-1	YOKE UNIT		1	*			
010-1C	632J70-7	YOKE UNIT	<	1				
010-1D	632J70-7	YOKE UNIT	<	1				
010-1E	632J70-7	YOKE UNIT	<	1				
010-1F	632J70-7	YOKE UNIT		1				
010-1G	632J70-7	YOKE UNIT		1				
010-1H	632J70-7	YOKE UNIT		1				
010-1I	632J70-7	YOKE UNIT		1				
010-1J	632J70-7	YOKE UNIT		1				
011	619380-9	ARMATURE		1				
012	632F21-6	BRUSH HOLDER COMPLETE		1				
C10	688172-7	LINE FILTER		1				
D10		INC. 13						
013	194427-5	КАРБОНОВА ЧЕТКА CB-440		1				
014	456099-7	REAR COVER		1				
015	266429-2	TAPPING SCREW 3X16		2				
016C	911006-2	ВИНТ С ЦИЛИНДРИЧНА ГЛАВА M3x8		1	*			
016D	911006-2	ВИНТ С ЦИЛИНДРИЧНА ГЛАВА M3x8		1	*			
016E	911006-2	ВИНТ С ЦИЛИНДРИЧНА ГЛАВА M3x8		1	*			
016-1C	652066-2	+PAN HEAD SCREW M3X9 WITH W	<	1				
016-1D	652066-2	+PAN HEAD SCREW M3X9 WITH W	<	1				
016-1E	652066-2	+PAN HEAD SCREW M3X9 WITH W	<	1				
016-1F	652066-2	+PAN HEAD SCREW M3X9 WITH W		1				
016-1G	652066-2	+PAN HEAD SCREW M3X9 WITH W		1				
016-1H	652066-2	+PAN HEAD SCREW M3X9 WITH W		1				
016-1I	652066-2	+PAN HEAD SCREW M3X9 WITH W		1				
016-1J	652066-2	+PAN HEAD SCREW M3X9 WITH W		1				
017	689070-8	ТОПЛООТВЕЖДАЩ РАДИАТОР		1				
018	232182-2	ПРУЖИНА ЛИСТОВА		1				
019	644808-8	TERMINAL		1				
020	424476-1	CUSHION		1				
022	183B65-0	HOUSING SET		1				
C10	263005-3	ЩИФТ ГУМЕН 6		2				
D10		INC. 2						
A01	251314-2	ВИНТ M4x12		1				
A02C	346317-0	HOOK		1				

Please order the parts with part number. Print Date 4/10/2019

Model No.DHP482 CORDLESS HAMMER DRIVER DRILL

Артикул	Номер на частта	Описание	Смяна	Количество	New/Old	Продажба	Покупка	Забележка
A02D	346317-0	HOOK		1				
A02E	346449-3	HOOK		1				
A02F	346317-0	HOOK		1				
A02G	346317-0	HOOK		1				
A02H	346317-0	HOOK		1				
A02I	346317-0	HOOK		1				
A02J	346317-0	HOOK		1				
A03	784637-8	+- СВРЕДЛО 2-45		1				
A04D	821550-0	CONNECTOR PLASTIC CASE (TYPE2)		1				
C10	453974-8	LATCH		4				
A04E	821550-0	CONNECTOR PLASTIC CASE (TYPE2)		1				
C10	453974-8	LATCH		4				
A04F	141856-3	PLASTIC CARRYING CASE COMPLETE		1				
C10	162302-3	LATCH		2				
C20	324207-7	ВАЛ		1				
C30	451749-9	HANDLE		1				
A04G	141856-3	PLASTIC CARRYING CASE COMPLETE		1				
C10	162302-3	LATCH		2				
C20	324207-7	ВАЛ		1				
C30	451749-9	HANDLE		1				
A04H	141856-3	PLASTIC CARRYING CASE COMPLETE		1				
C10	162302-3	LATCH		2				
C20	324207-7	ВАЛ		1				
C30	451749-9	HANDLE		1				
A04I	141856-3	PLASTIC CARRYING CASE COMPLETE		1				
C10	162302-3	LATCH		2				
C20	324207-7	ВАЛ		1				
C30	451749-9	HANDLE		1				
A04J	821550-0	CONNECTOR PLASTIC CASE (TYPE2)		1				
C10	453974-8	LATCH		4				
A05D	450128-8	БАТЕРИЯ КАПАК		1				
A05E	450128-8	БАТЕРИЯ КАПАК		1				
A05F	450128-8	БАТЕРИЯ КАПАК		2				
A05G	450128-8	БАТЕРИЯ КАПАК		1				
A05H	450128-8	БАТЕРИЯ КАПАК		1				
A05J	450128-8	БАТЕРИЯ КАПАК		2				
A06D	***DC18RC	DC18RC FAST CHARGER		1				
A06E	***DC18RC	DC18RC FAST CHARGER		1				
A06F	***DC18RC	DC18RC FAST CHARGER		1				
A06G	***DC18RC	DC18RC FAST CHARGER		1				
A06H	***DC18RC	DC18RC FAST CHARGER		1				
A06I	***DC18RC	DC18RC FAST CHARGER		1				
A06J	***DC18RC	DC18RC FAST CHARGER		1				
A07D	197265-4	BATTERY BL1840B SET		2				
A07E	197254-9	BATTERY BL1820B SET		2				
A07F	197600-6	BATTERY BL1830B SET		3				
A07J	197280-8	BATTERY BL1850B SET		3				
A07-1G	197265-4	BATTERY BL1840B SET		2				
A07-1H	197600-6	BATTERY BL1830B SET		2				
A07-1I	197600-6	BATTERY BL1830B SET		1				
A08D	837916-4	INNER TRAY		1				
A08E	837863-9	INNER TRAY		1				
A08F	808Y42-6	DHP482RFE3 PLASTIC CASE LABEL		1	*			
A08G	807S02-9	DHP482RME PLASTIC CASE LABEL		2	*			
A08J	837916-4	INNER TRAY		1				
A08-1F	816F53-3	DHP482RFE3 PLASTIC CASE LABEL	X	2				
A08-1G	816F45-2	DHP482RME PLASTIC CASE LABEL	X	2				

Please order the parts with part number. Print Date 4/10/2019

Model No.DHP482 CORDLESS HAMMER DRIVER DRILL

Артикул	Номер на частта	Описание	Смяна	Количество	New/Old	Продажба	Покупка	Забележка
A08-1H	816F51-7	DHP482RFE PLASTIC CASE LABEL		2				
A08-1I	817V69-7	DHP482RF PLASTIC CASE LABEL		2				
A09D	808J15-9	DHP482RMJ INDICATION LABEL		1	*			
A09E	808J17-5	DHP482RAJ INDICATION LABEL		1	*			
A09-1D	816F64-8	DHP482RMJ INDICATION LABEL	O	1				
A09-1E	816F66-4	DHP482RAJ INDICATION LABEL	O	1				
A09-1J	816F83-4	DHP482RT3J INDICATION LABEL		1				
A10D	808J16-7	DHP482RMJ PLASTIC CASE LABEL		2	*			
A10E	808J18-3	DHP482RAJ PLASTIC CASE LABEL		2	*			
A10-1D	816F65-6	DHP482RMJ PLASTIC CASE LABEL	X	2				
A10-1E	816F67-2	DHP482RAJ PLASTIC CASE LABEL	X	2				
A10-1J	816F84-2	DHP482RT3J PLASTIC CASE LABEL		2				

Please order the parts with part number.

Print Date 4/10/2019

магазин БАШ МАЙСТОРА® ПРОФЕСИОНАЛНИ РЕШЕНИЯ