HONDA

GX160UT2-SG-24-SD

Technical Documentation

Published on 11.02.2022

Honda Engines - Honda Motor Europe Logistics NV - Langerbruggestraat 104 - B- 9000 Gent - Tel: + 32 (0)9 250 12 11
www.honda-engines-eu.com

HONDA

MODEL GX160 SPECIFICATIONS

Engine type	4-stroke single cylinder OHV petrol engine 25° inclined cylinder horizontal shaft
Cylinder sleeve type	Cast iron sleeve
Bore x Stroke	68 x 45 mm
Displacement	163 cm^3
Compression ratio	9.0 : 1
Net power	3.6 kW (4.8 HP) / 3600 rpm
Cont. rated power	2.5 kW (3.4 HP) / 3000 rpm 2.9 kW (3.9 HP) / 3600 rpm
Max. net torque	10.3 Nm (1.05 kgfm) / 2500 rpm
Fuel tank capacity	3.1 Liter
Fuel cons. at cont. rated power	1.4 L/h - 3600 rpm
Engine oil capacity	0.6 Liter
Dimensions (L x W x H)	312 x 362 x 346 mm
Dry weight	15.1 kg
Lubrication system	Forced splash
Recommended oil	APISJ-SAE 10W30
Ignition system	Ignition coil with fixed timing, Shut off by connecting the primary coil to ground
Fuel system	Float carburator
Governor	Mechanical centrifugal
Allowed ambient temperature	Between -15°C and +40°C
Allowed altitude	Between 0 and 1500 m, above 1500 m replace the main jet
Maximum inclination	Maximum 20° in every direction
PTO shaft rotation	Counterclockwise from PTO side

HONDA

GX160UT2-SG-24-SD SPECIFICATIONS

Shaft type	S
Shaft diameter	20 mm
Shaft thread	Int M8 x 1,25
PTO key type	5x5x33
Choke type	Lever
Throttle control	Lever / remote cable
Air cleaner	Silent
Oil alert	Yes
Electric starter	No
Charge coil	No
Lamp coil	No
Control box	No
Reduction	No
Muffler	Std
Fuel filter	No
Deflector kit	Yes
Spark arrestor	Yes
Tools assy	No
Washer&bolt kit	No
Supplied loose	Key # 5x33, deflector
RPM	3900 +/-100
EU Exhaust	Yes
US EPA Exhaust	Yes
US EPA Evaporative	Yes
CARB Exhaust	Yes
CARB Evaporative	Yes
China Exhaust	No
Australia RCM	Yes
Non Certified	No
Remark	None

HONDA

ILLUSTRATIONS GX160UT2-SG-24-SD

Shaft type

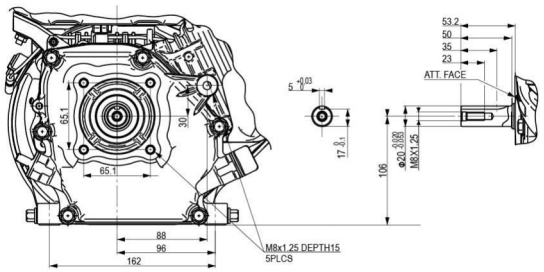

Choke type

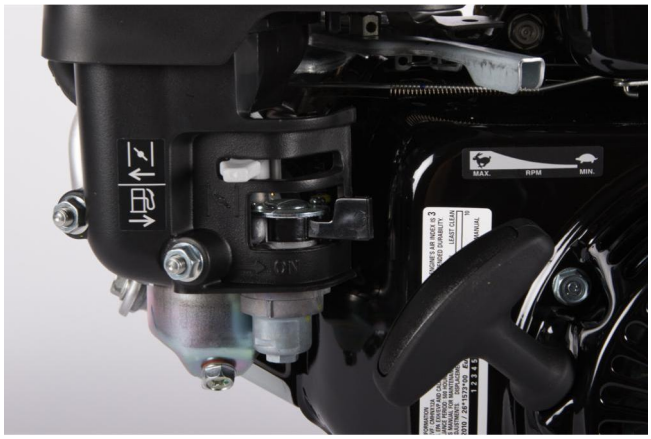

Throttle control

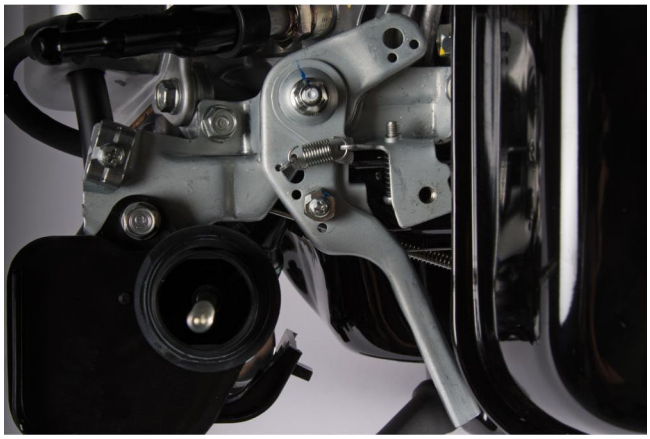

Air cleaner

Start / stop

HONDA

POWER CURVE GX160

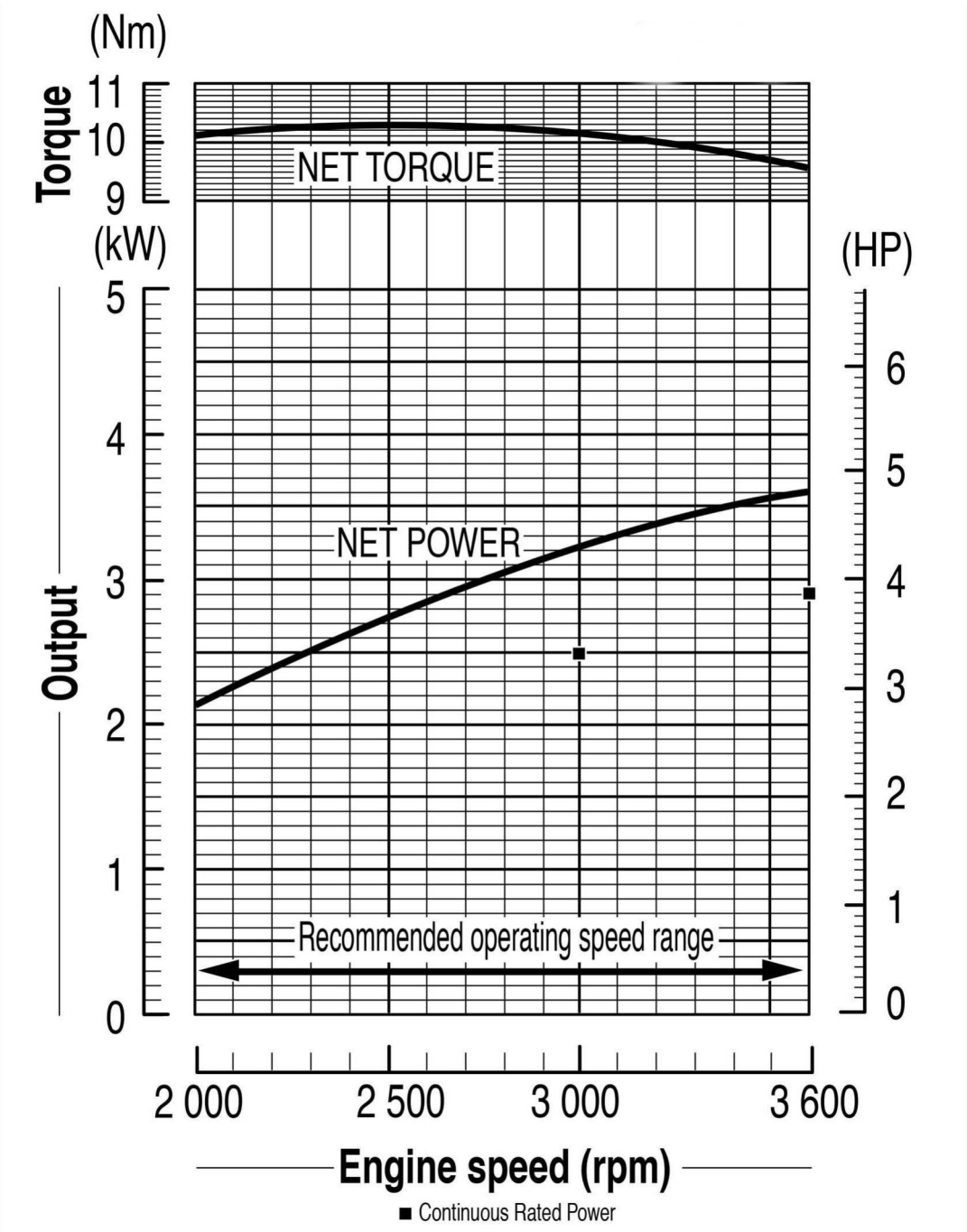

The power rating of the engine indicated in this document is the net power tested on a production engine for the engine model and measured in accordance with SAE J1349 at a specific rpm. Mass production engines may vary from this value. Actual power output for the engine installed in the final machine will vary depending on numerous factors, including the operation speed of the engine in application, environmental conditions, maintenance, and other variables.

HONDA

TECHNICAL DRAWING GX160

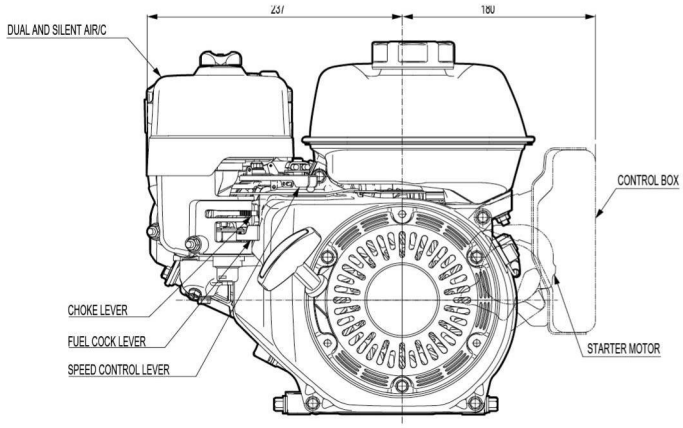

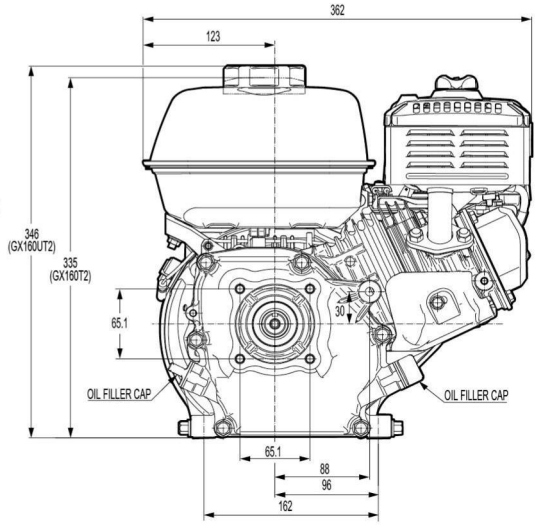

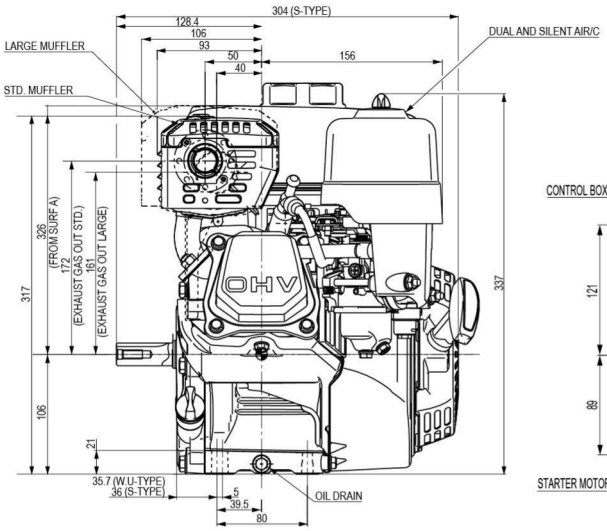

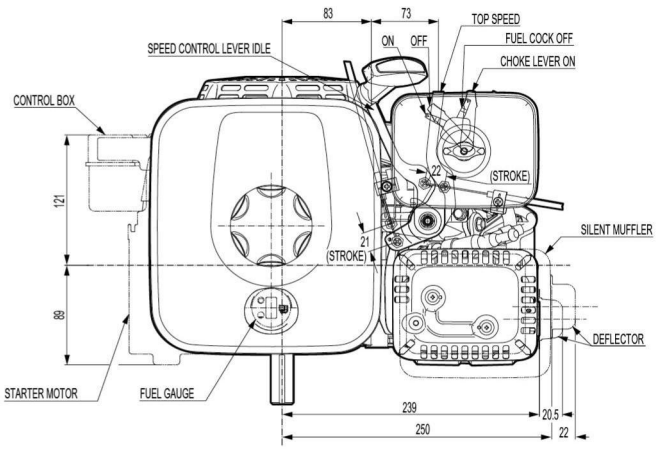

These technical drawings are the standard drawings, depending on the specifications of the engine the dimensions can deviate from the standard dimensions.

HONDA

WIRING DIAGRAM GX160

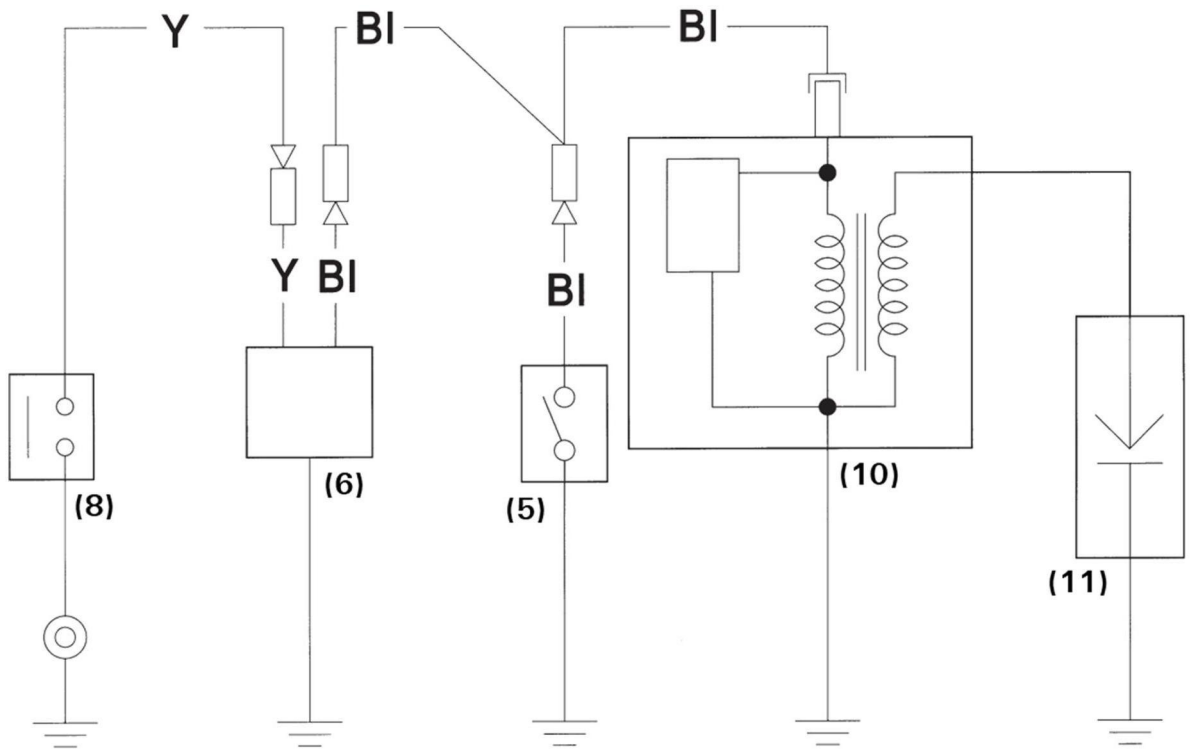

(1) CONTROL BOX
(2) RECTIFIER
(3) FUSE
(4) CIRCUIT BREAKER
(5) ENGINE SWITCH
(6) OIL ALERT UNIT
(7) Type with Oil Alert unit
(8) OIL LEVEL SWITCH
(9) CHARGING COIL
(10) IGNITION COIL
(11) SPARK PLUG
(12) STARTER MOTOR
(13) STARTER SOLENOID
(14) BATTERY (12 V)

	IG	E
OFF	o——o	
ON		

Bl	Black	Br	Brown
Y	Yellow	O	Orange
Bu	Blue	Lb	Light blue
G	Green	Lg	Light green
R	Red	P	Pink
W	White	Gr	Gray

The standard wiring diagram is included in this document. Depending on the specifications of the engine the wiring diagram can deviate from the standard one.

HONDA

SERVICE

At your service …

Over 700 Honda Engine Specialists all over Europe for maintenance and repair of your Honda engine offering:

Repair workshop | Warranty handling | Spare parts retail outlet | Replacement engines

Visit our website www.honda-engines-eu.com and find your local Honda Engine Specialist, the correct spare parts for your engine at the online spare parts catalogue, and much more information on the Honda engines.

Warranty period for GX160

Non-commercial use	36 months
Commercial use	36 months
Karting	3 months

These warranty conditions are valid for following countries:

Austria, Belgium, Croatia, Cyprus, the Czech Republic, Denmark, Finland, France, Germany, Gibraltar, Greece, Hungary, Iceland, Ireland, Italy, Luxemburg, the Netherlands, Norway, Poland, Portugal, Slovakia, Spain, Sweden, Switzerland, Bulgaria, Latvia, Estonia, Lithuania, Malta, Romania, Slovenia, the Canary Islands, the UK, Turkey, Russia and Macedonia.
Other warranty conditions for Belarus and Serbia.
For countries, which are not listed, please consult with the European Engine Centre after sales service department in order to check the availability of a Honda distributor and the applied warranty conditions.
The invoice of the machine must be used to prove the date of purchase.

All content of this document (text, pictures, images, graphs, etc) is owned by Honda and its affiliates, and is protected by copyright law. It is prohibited to copy, modify, reproduce, distribute, sell or publish the material for commercial use or gain without Honda's written permission.
Honda reserves the right to modify the content without any prior notice. All efforts are made to keep the information up-to-date and accurate.
The images in the document are the real images of the specific engine unless mentioned otherwise.
Honda is not responsible for any damage caused to third parties through the incorrect or incomplete use, direct or indirect, of information from this document.
The accessories included in the document are not supplied with the engine and need to be ordered separately.