Model No. DDF481 CORDLESS DRIVER DRILL

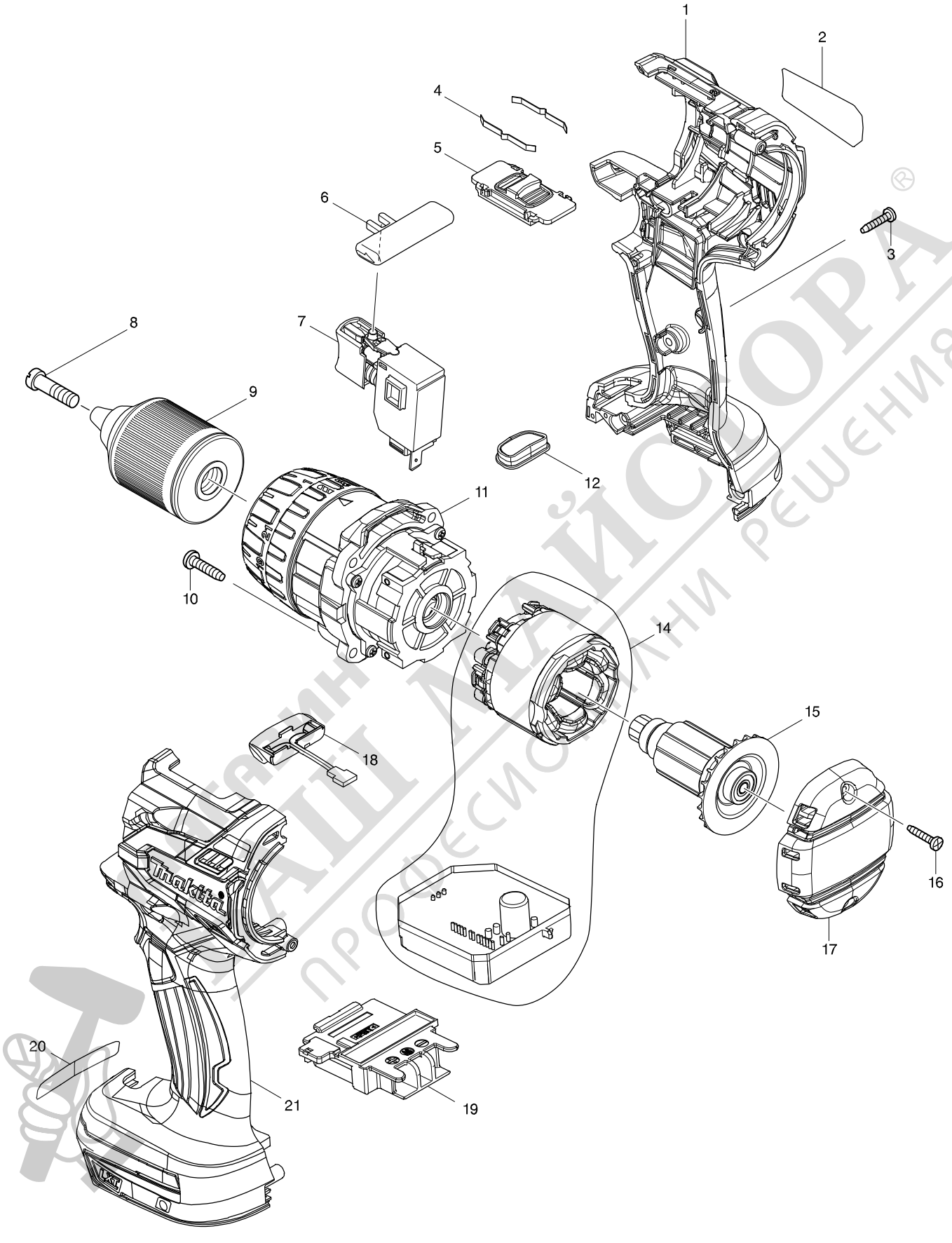

МАЙСТОРА
ПРОФЕСИОНАЛНИ РЕШЕНИЯ

Model No. DDF481 CORDLESS DRIVER DRILL

Item	Parts No.	Description	I/C	Qty	N/O	Opt. 1	Opt. 2	Note
001	187921-4	HOUSING SET		1				
C10	263005-3	RUBBER PIN 6		2				
D10		INC. 21						
002	815S56-2	DDF481 NAME PLATE		1				
003	266130-9	TAPPING SCREW BIND PT 3X16		7				
004	232220-0	LEAF SPRING		2				
005	126411-2	SPEED CHANGE LEVER ASSEMBLY		1				
C10	233438-6	COMPRESSION SPRING 4		2				
006	419250-0	F/R CHANGE LEVER		1				
007	650710-5	SWITCH C3JW-4B		1				
008	251468-5	- FLAT HEAD SCREW M6X22		1				
009	766015-4	KEYLESS DRILL CHUCK 13		1				
010	265995-6	TAPPING SCREW 4X18		4				
011	126409-9	GEAR ASSEMBLY		1				
012	142263-3	INDICATOR PANEL COMPLETE		1				
014	629116-8	STATOR COMPLETE		1				
015	619336-2	ROTOR		1				
016	266130-9	TAPPING SCREW BIND PT 3X16		2				
017	455011-4	REAR COVER		1				
018	620283-2	LED CIRCUIT		1				
019	643899-6	TERMINAL		1				
021	187921-4	HOUSING SET		1				
C10	263005-3	RUBBER PIN 6		2				
D10		INC. 1						
A01	126412-0	GRIP ASSEMBLY		1				
C10	142652-2	POLE COMPLETE		1				
C20	142653-0	ARM R COMPLETE		1				
C30	266886-4	HEX. BOLT M8X65		1				
C40	319129-4	ARM L		1				
C50	962055-2	RETAINING RING (INT) R-15		1				
A02	251314-2	+ SCREW M4X12		2				
A03	346317-0	HOOK		1				
A04	452947-8	BIT HOLDER		1				
A05	784637-8	+- BIT 2-45		2				
A06	821524-1	PLASTIC CARRYING CASE		1				
C10	162302-3	LATCH		2				
C20	325809-2	SHAFT		1				
C30	451749-9	HANDLE		1				
C40	453473-0	PLASTIC CASE LID		1				
A07	***DC18RC	DC18RC FAST CHARGER		1				
A08	194204-5	BATTERY BL1830 SET		2				
A09	450128-8	BATTERY COVER		1				

магазин БАЙ МАЙСТОРА® професионални решения