Model No. DF331D CORDLESS DRIVER DRILL

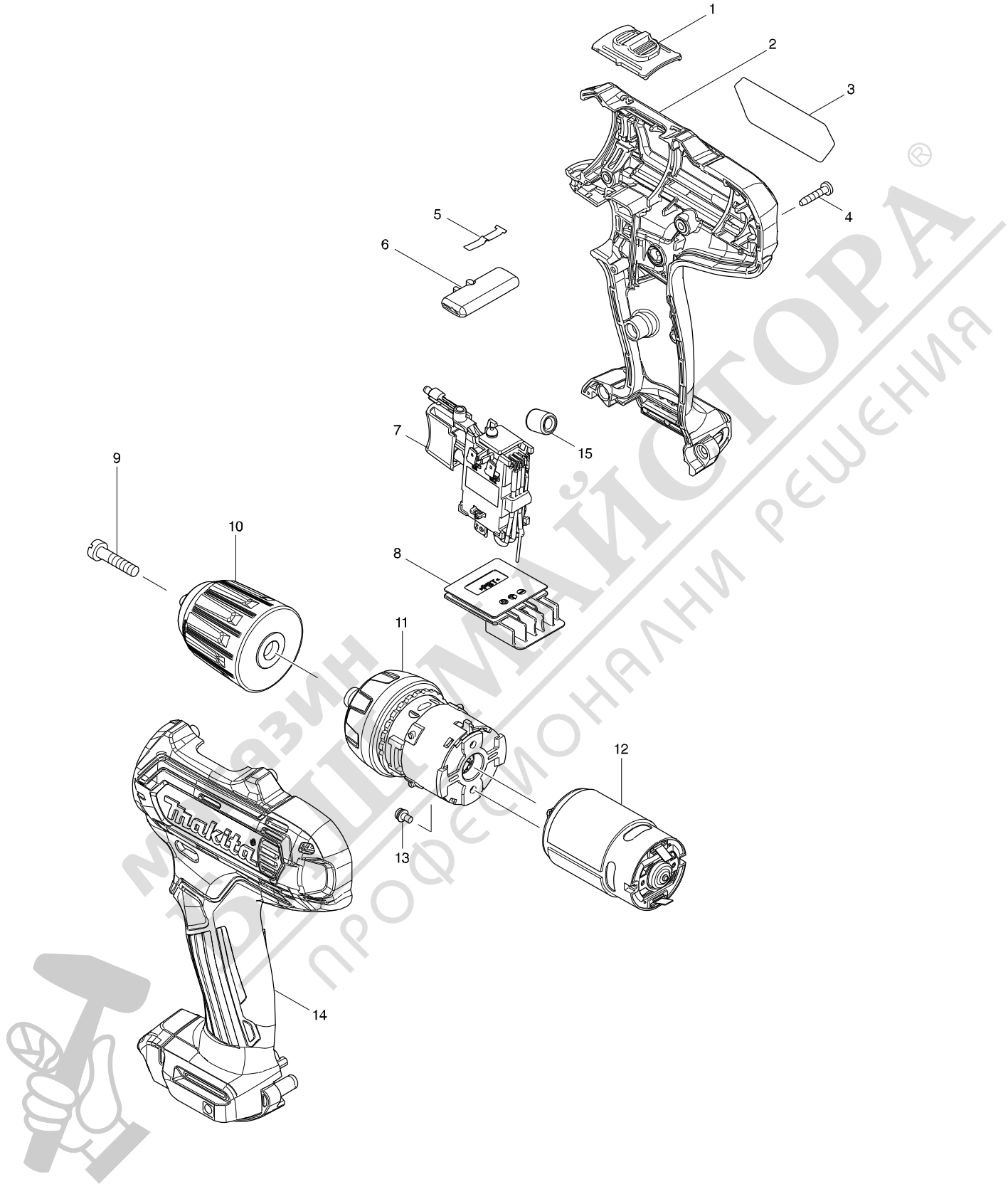

магазин МАЙСТОРА ®
ПРОФЕСИОНАЛНИ РЕШЕНИЯ

Model No. DF331D CORDLESS DRIVER DRILL

Item	Parts No.	Description	I/C	Qty	N/O	Opt. 1	Opt. 2	Note
001	126233-0	SPEED CHANGE LEVER ASSEMBLY		1				
C10	231433-0	COMPRESSION SPRING 4		2				
002	183B50-3	HOUSING SET		1				
C10	252126-6	HEX. LOCKING NUT M4-7		2				
D10		INC. 14						
003	851H36-8	DF331D NAME PLATE		1				
004	266429-2	TAPPING SCREW 3X16		9				
005	232239-9	LEAF SPRING		1				
006	456039-5	F/R CHANGE LEVER		1				
007	632F43-6	SWITCH UNIT		1				
C10	620463-0	LED CIRCUIT		1				
008	644813-5	TERMINAL		1				
009	251451-2	- PAN HEAD SCREW M5X22		1				
010	763228-8	KEYLESS DRILL CHUCK 10		1				
011	123503-8	GEAR ASS'Y		1				
012	629169-7	DC MOTOR		1				
013	911003-8	PAN HEAD SCREW M3X6		2				
014	183B50-3	HOUSING SET		1				
C10	252126-6	HEX. LOCKING NUT M4-7		2				
D10		INC. 2						
A01	251314-2	+ SCREW M4X12		1				
A02	346909-5	HOOK		1				
A03	784202-3	PHILLIPS BIT 2-45		1				
A04B	456128-6	BATTERY COVER		1				
A04C	456128-6	BATTERY COVER		1				
A04D	456128-6	BATTERY COVER		1				
A05B	***DC10SB	DC10SB BATTERY CHARGER		1				
D10		COMPO-PARTS						
A05C	***DC10WD	DC10WD BATTERY CHARGER		1				
D10		COMPO-PARTS						
A05D	***DC10WD	DC10WD BATTERY CHARGER		1				
D10		COMPO-PARTS						
A06B	197406-2	BATTERY BL1041B SET		2				
A06C	197396-9	BATTERY BL1021B SET		2				
A06D	197393-5	BATTERY BL1016 SET		2				
A07B	821661-1	PLASTIC CARRYING CASE		1				
C10	417724-5	LATCH		2				
A07C	821661-1	PLASTIC CARRYING CASE		1				
C10	417724-5	LATCH		2				
A07D	821661-1	PLASTIC CARRYING CASE		1				
C10	417724-5	LATCH		2				

МАГАЗИН ПРОФЕСИОНАЛНИ РЕШЕНИЯ BALL МАЙСТОРА ®

Please order the parts with a part number.

Print Date 01/07/2016