LYNX®

ELEKTRO MASCHINEN

WHP 5065

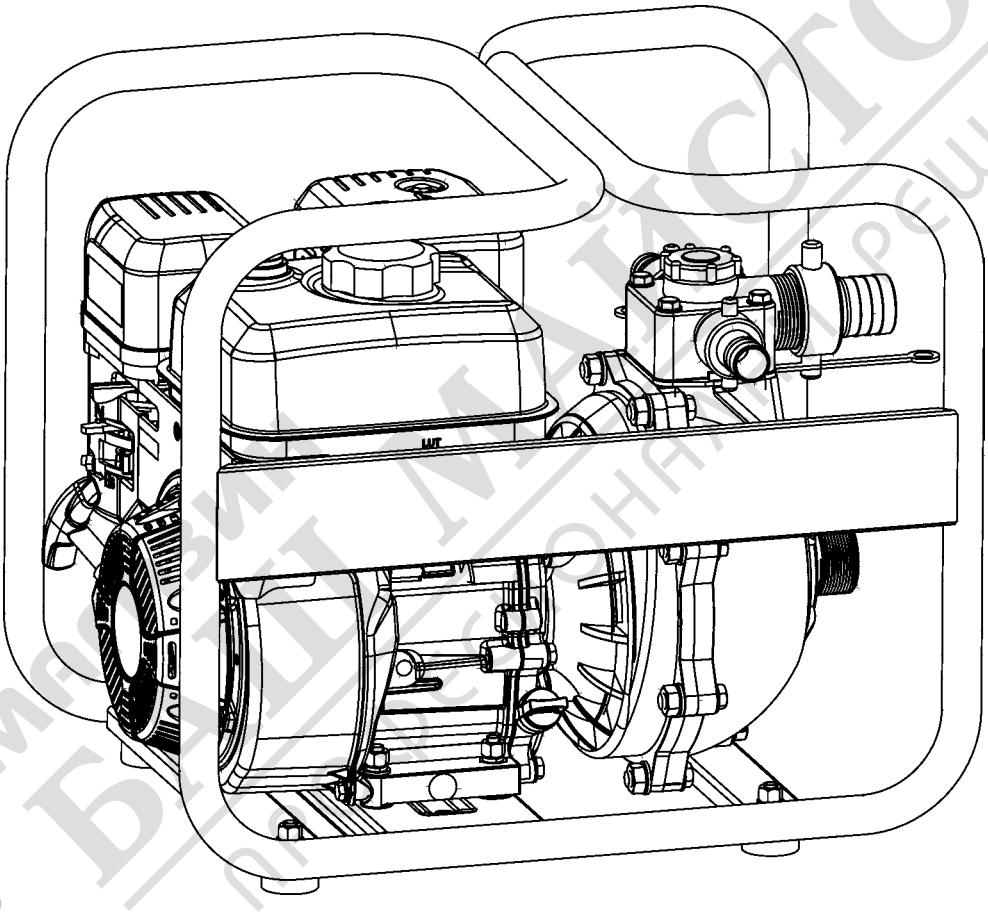

www.elektro-maschinen.com

Lesen und verstehen Sie die Bedienungsanleitung, bevor Sie die Maschine in Betrieb nehmen.

Pred uporabo stroja preberite in razumite navodila za uporabo.

Read and understand the owner's manual before operating the machine.

МАГАЗИН БАШ МАЙСТОРА® ПРОФЕСИОНАЛНИ РЕШЕНИЯ

CONTENTS

IMPORTANT SAFETY INFORMATION 1
COMPONENT & CONTROL LOCATIONS 2
BEFORE OPERATION 3
OPERATION 4
Pump Placement 4
Puction Hose Installation 5
Discharge Hose Installation 6
Priming The Pump 6
Starting The Engine 7
Setting Engine Speed 9
STOPPING THE ENGINE 9
SERVICING THE PUMP 10
Maintenance Safety 11
Safety Precautions 11
Maintenance Schedule 12
Refueling 13
Fuel Recommendations 13
Oil Recommendations 14
Oil Level Check 14
Oil Change 15
Air Filter Inspection & Service 16
Sediment Cup Cleaning 17
Spark Plug Service 18
Idle Speed Adjustment 19
STORING THE PUMP 19
Cleaning 20
Fuel 20
Adding A Fuel Stabilizer To Extend Fuel Storage Life 21
Draining The Fuel Tank And Carburetor 22
Engine Oil 22
Storage Precautions 23
Removal From Storage 23
Transporting 23
CARBURETOR MODIFICATION FOR HIGH ALTITUDE OPERATION 23
TROUBLESHOOTING 24
SPECIFICATIONS 25

Магазин БАШ МАЙСТОРА® профессионални решения

IMPORTANT SAFETY INFORMATION

Most accidents can be prevented if you follow all instructions in this manual and on the pump. The most common hazards are discussed below，along with the best way to protect yourself and others.

WARNING!

The warnings，cautions and instructions discussed in this instruction Manual cannot cover all possible conditions and situations that ma yoccur. It must be understood by the operator that COMMON SEHSE ANDCAUTION ARE FACTORS WHICH CANNOT BE BUILTINTO THIS PRODUCT，BUT MUST BE SUPPLIED BY THE OPERATOR.

- Read and understand this owner's manual before operating the pump. Failure to do so could result in personal injury or equipment damage.
- This pump is designed to pump only water that is not intended for human consumption. Other uses can result in injury to the operator or damage to the pump and other property. Pumping flammable liquids，such as gasoline or fuel oils，can result in a fire or explosion，causing serious injury. Pumping sea water, beverages，acids，chemical solutions，or any other liquid that promotes corrosion can damage the pump.
- Know how to stop the pump quickly，and understand the operation of all controls. Never permit anyone to operate the pump without proper instructions.
- Do not allow children to operate the pump. Keep children and pets away from the area of operation.
- Dress properly. Do not wear loose clothing or jewelry. Contain long hair. Keep your hair, clothing，and gloves away from moving parts. Loose clothes，jewelry，and long hair can be caught in moving parts，
- Do not operate pump in explosive atmospheres，such as in the presence of flammable liquids，gases，or dust. The engine creates sparks，which may ignite the dust or fumes.
- Gasoline is extremely flammable，and gasoline vapor can explode，Refuel outdoors，i n a well-ventilated area，with the pump stopped. Never smoke near gasoline，and keep other flames and sparks away. Always store gasoline in an approved container. If any fuel is spilled，make sure the area is dry before starting the pump.
- The muffler becomes very hot during operation and remains hot for a while after stopping the engine. Be careful not to touch the muffler while it is hot. Let the engine cool before storing the pump indoors.
- To prevent fire hazards and to provide adequate ventilation for stationary equipment applications，keep the pump at least 3 feet away from building walls and other equipment during operation. Do not place flammable objects close to the pump.
- Exhaust gas contains poisonous carbon monoxide. Avoid inhalation of exhaust gas. Never run the pump in a closed garage or confined area.
- Do not overload the pump. Use the correct pump for your·application. The correct pump will do the job better and safer at the rate for which it is designed.

Магазин БАШ МАЙСТОРА® профессиональной техники

SAVE THIS MANUAL

You will need this manual for the cleaning procedures，parts list inspection, maintenance and with this manual. Write the invoice number on the inside of the front cover. Keep this manual and invoice in a safe and dry place for future-reference.

COMPONENT ＆ CONTROL LOCATIONS

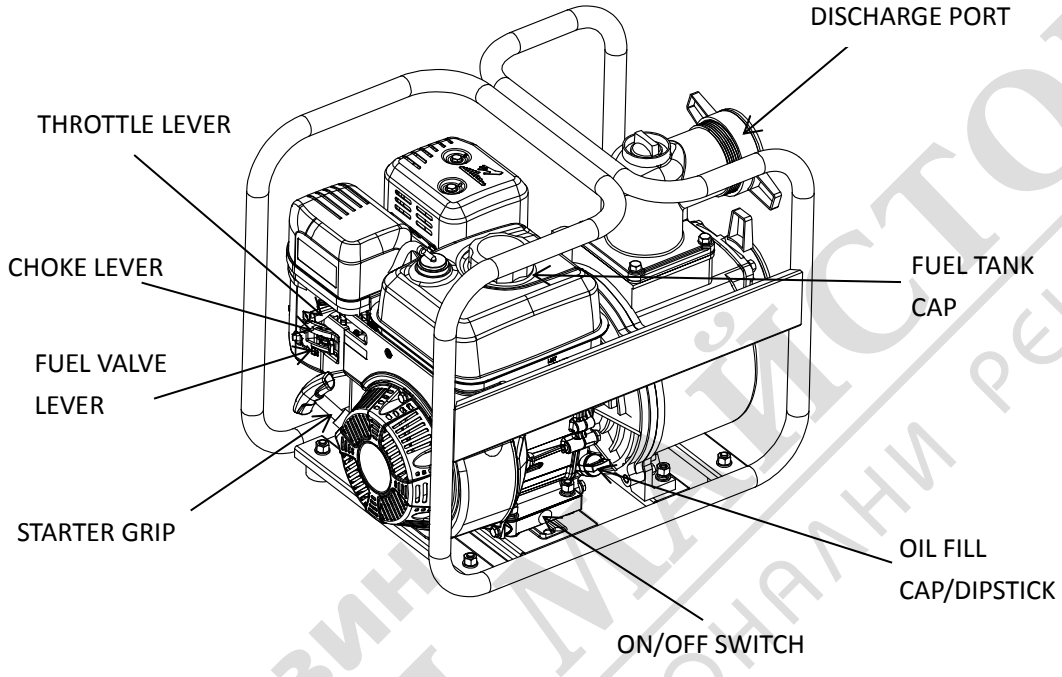

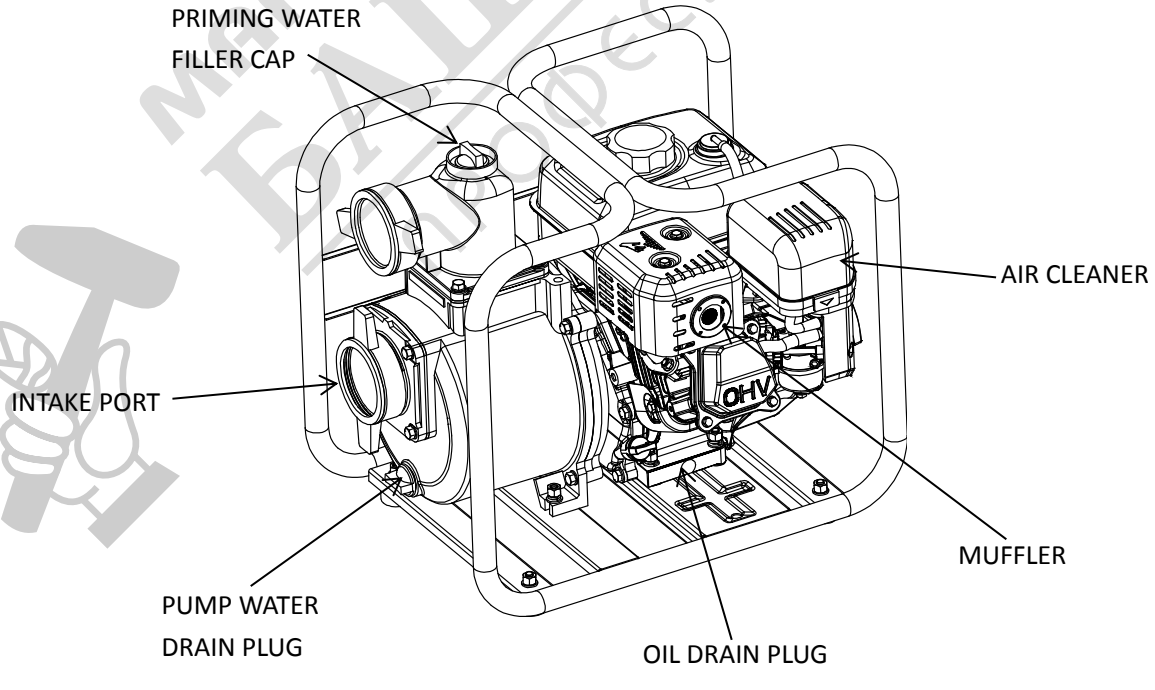

магазин БАШ МАЙСТОРА професионални решения

BEFORE OPERATION

IS THE PUMP READY TO GO?

For your safety，and to maximize the service life of your equipment, it is very important to take a few moments before you operate the pump to check its condition. Be sure to take care of any problem you find，or have a qualified mechanic correct it, before you operate the pump.

> **WARNING!** Improperly maintaining this pump，or failing to correct a problem before operation，could cause a malfunction in which you could be seriously injured. Always perform a pre-operation inspection before each operation，and correct any problem·

Before beginning your pre-operation checks，be sure the pump is level and the engine switch is in the OFF position.

CHECK THE GENERAL CONDITION OF THE PUMP

● Look around and underneath the pump for signs of oil or gasoline leaks.
● Check that all nuts，bolts，screws，hose connectors and clamps are tightened.
● Remove any excessive dirt or debris，especially around the engine muffler and recoil starter.
● Look for signs of damage.

CHECK THE SUCTION AVID DISCHARGE HOSES

● Check the general condition of the hoses. Be sure the hoses are in serviceable condition before connecting them to the pump. Remember that the suction hose must be reinforced construction to prevent hose collapse.
●Check that the sealing washer in the suction hose connector is in good condition.
●Check that the hose connectors and clamps are securely installed.
●Check that the strainer is in good condition and is in stand on the suction hose.

CHECK THE ENGINE

●Check the engine oil level .Running the engine with a low of level can cause engine damage· The oil sensor will automatically stop the engine before the oil level falls below safe limits. However, to avoid the in convenience of an unexpected shutdown，always check the engine of level before startup.
●Check the air filter. A dirty air filter will restrict air flow to the carburetor, reducing engine performance.
●Check the fuel level. Starting with a full tank will help to eliminate or reduce operating.

> **WARNING!** Carbon monoxide gas is toxic. Breathing it can cause unconsciousness and even kill you .Avoid any areas or actions that expose you to carbon monoxide.

магазин ВАШ МАЙСТОР професионални решения

OPERATION

Before operating the engine for the first time, please review the IMPORTANT SAFETY INFORMATION and BEFORE OPERATION.

Pump only water that is not intended for human consumption. Pumping flammable liquids, such as gasoline or fuel oils, can result in a fire or explosion，causing serious injury. Pumping sea water, beverages, acids, chemical solutions，or any other liquid that promotes corrosion can damage the
pump.

PUMP PLACEMENT

For best pump performance，place the pump near the water level，and use hoses that are no longer than necessary. That will enable the pump to produce the greatest output.

As head (pumping height) increases， pump output decreases. Maximum head specifications and pump performance curves are shown in the table on page 2.The length，type，and size of the suction and discharge hoses can also significantly affect pump output.

Discharge head capability is always greater than suction head capability，so it is important for suction head to be the shorter part of total head.

Minimizing suction head(placing the pump near the water level)is also very important for reducing self-priming time. Self-priming time is the time it takes the pump to bring water the distance of the suction head during initial operation.

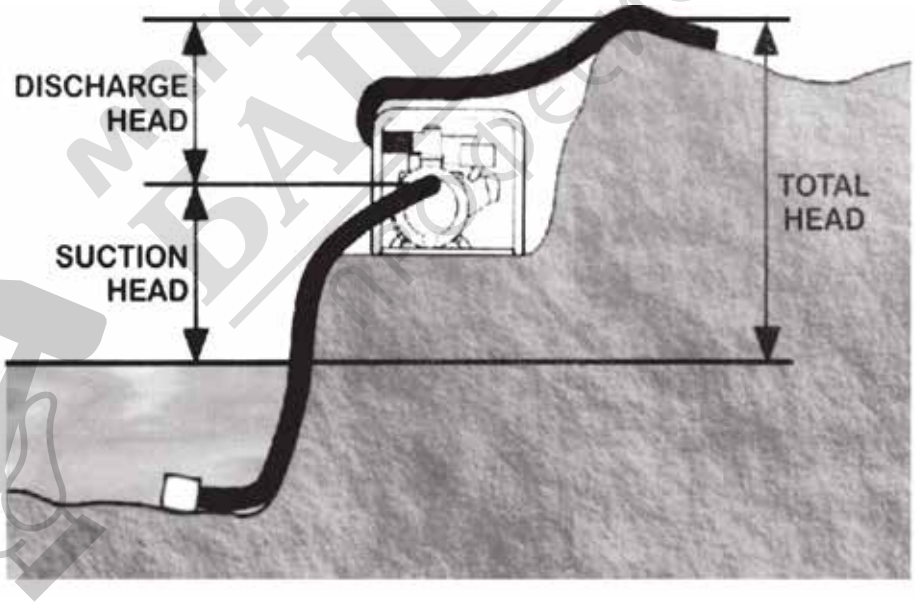

SUCTION HOSE INSTALLATION

Use the commercially available hose and hose connector with the hose clamp provided with the pump. The suction hose must be reinforced with a non-collapsible wall or braided wire construction.

The suction hose should be no longer than necessary. Pump performance is best when the pump is near the water level，and the hoses are short.

Use a hose clamp to securely fasten the hose connector to the suction hose in order to prevent air leakage and loss of suction. Verify that the hose connector sealing washer is in good condition.

Install the strainer(provided with the pump) on the other end of the suction hose，and secure it with a hose clamp. The strainer will help to prevent the pump from becoming clogged or damaged by debris.

Securely tighten the hose connector on the pump suction port.

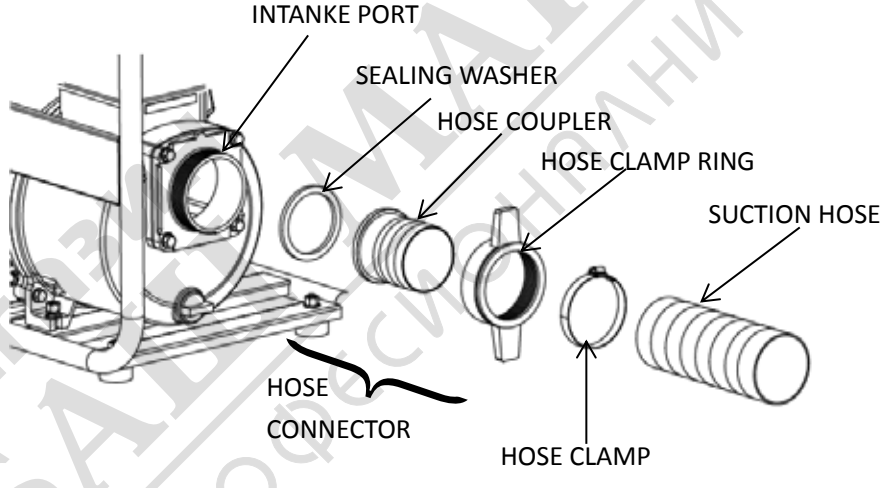

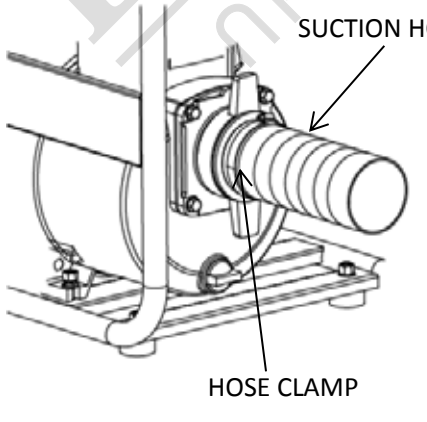

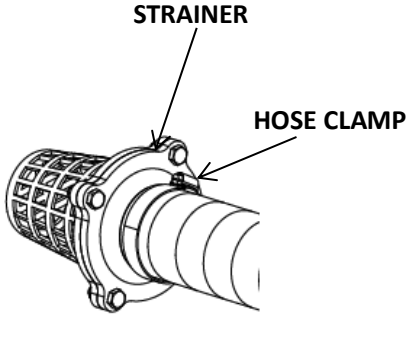

магазин БАЙМАЙСТОРА® професионални решения

DISCHARGE HOSE INSTALLATION

Use a commercially available hose and hose connector, and clamp provided with the pump·

It is best to use a short, large-diameter hose，because that will reduce fluid friction and improve pump output. A long or small-diameter hose will increase fluid friction and reduce pump output.

Tighten the hose clamp securely to prevent the discharge hose from disconnecting under high pressure.

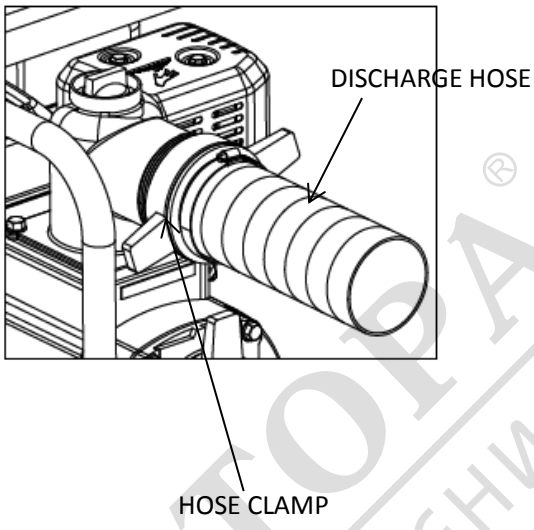

PRIMING THE PUMP

Before starting the engine，remove the filler cap from the pump chamber, and completely fill the pump chamber with water. Reinstall the filler cap，and tighten it securely.

Notice: Operating the pump dry will destroy the pump seal. If the pump has been operated dry，stop the engine immediately, and allow the pump to cool before priming.

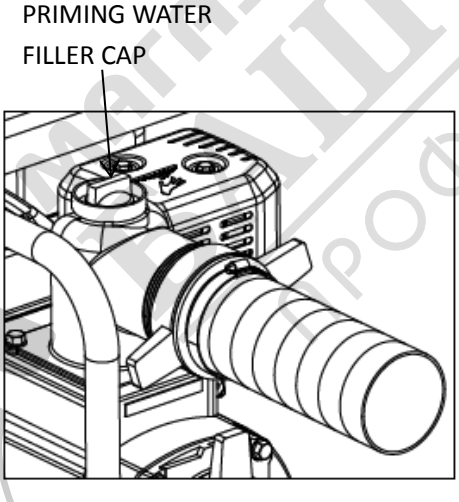

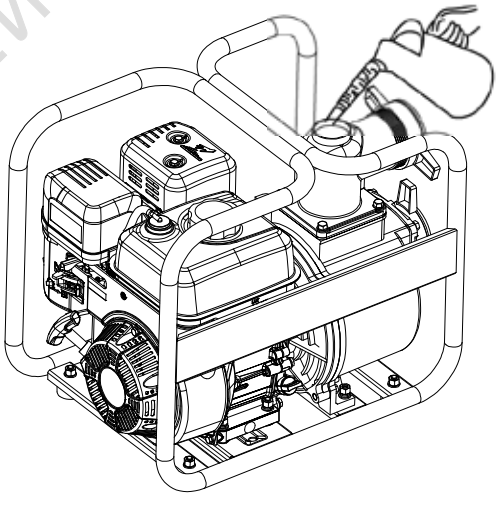

магазин ВАШ МАЙСТОРА® професионални решения

STARTING THE ENGINE

1 .Prime the pump.
2 .Move the fuel valve lever to the ON position. The fuel valve opens and closes the passage between the fuel tank and the carburetor. The fuel valve lever must be in the ON position for the engine to run.

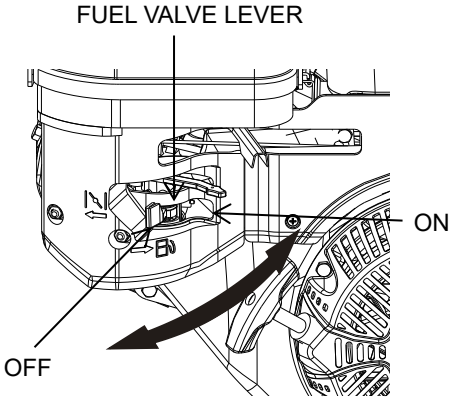

3 .To start a cold engine，move the choke lever to the CLOSE position. To restart a warm engine，leave the choke lever in the OPEN position. The choke lever opens and closes the choke valve in the carburetor. The CLOSE position enriches the fuelmix ture for starting a cold engine. The OPEN position provides the correct fuel mixture for operation after starting，and for restarting a warm engine.

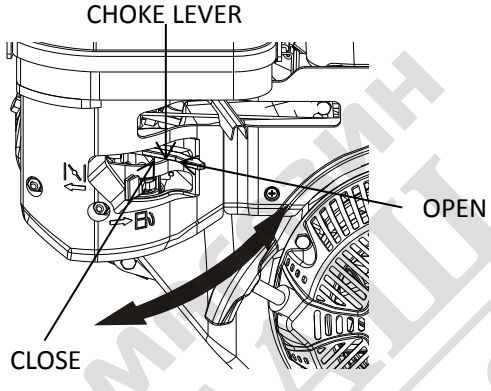

4 .Move the throttle lever away from the SLOW position，about 1/3 of the way toward the FAST position. The throttle lever controls engine speed. Moving the throttle lever in one direction or the other, makes the engine run faster or slower.

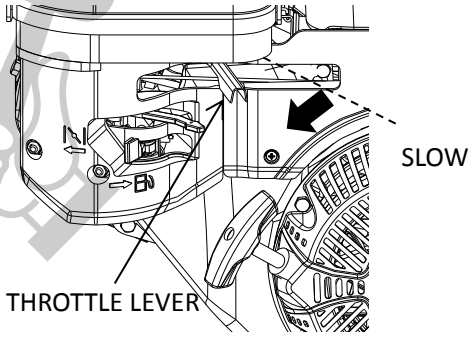

МИСТЕЙН БАШ МАЙСТОРА ПРОФЕСИОНАЛНИ РЕШЕНИЯ

5 .Turn the engine switch to the ON position. The engine switch enables and disables ignition system. The engine switch must be in position for the engine to run. Turning the engine switch to position stops the engine.

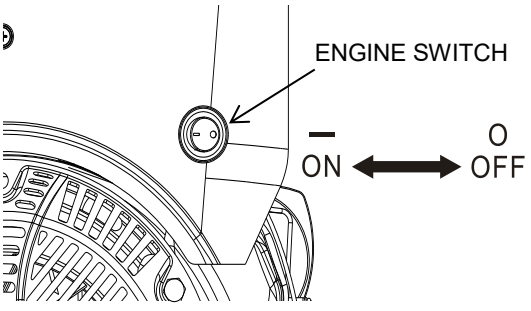

6. Operate the RECOIL STARTER: Pull the starter grip lightly until you resistance，then pull briskly. Return the starter grip gently. Pulling the starter grip operates the recoil starter to crank the engine.

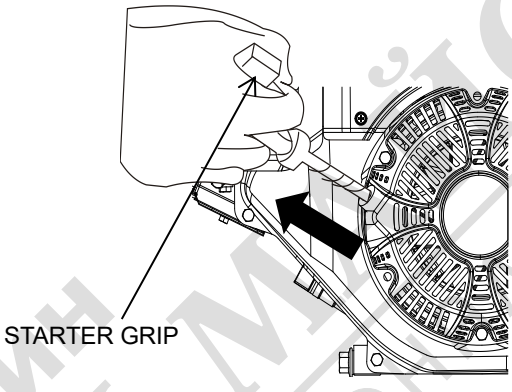

7 .If the choke lever has been moved to the CLOSE position to start the engine，gradually move it to the OPEN position as the engine warms up.

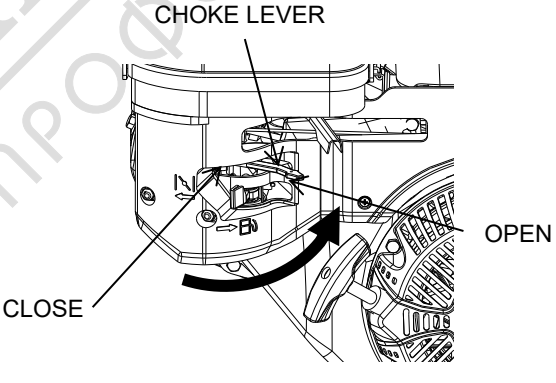

магазин БАШ МАЙСТОРА® професионални решения

SETTING ENGINE SPEED

Position the throttle lever for the desired engine speed.
Moving the throttle lever in the directions shown makes the engine run faster or slower.

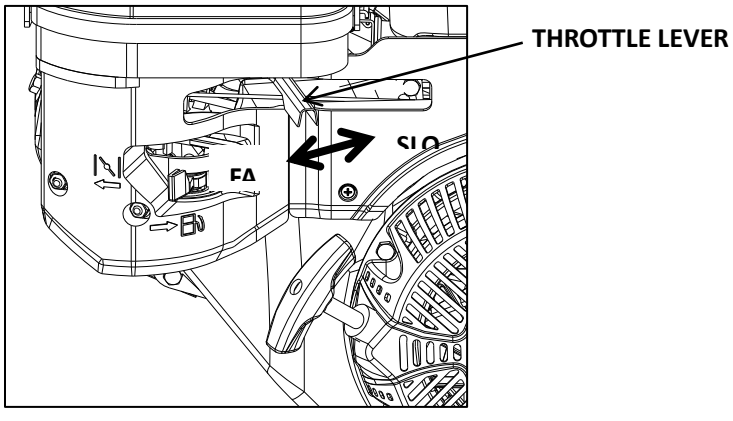

After starting the engine，move the throttle lever to the FAST position and check pump output.
Pump output is controlled by adjusting engine speed. Moving the throttle lever in the FAST direction will increase pump output, and moving the throttle lever in the SLOW direction will decrease pump output.

WARNING!	Carbon monoxide gas is toxic. Breathing it can cause unconsciousness and even kill you .Avoid any areas or actions that expose you to carbon monoxide.

STOPPING THE ENGINE

To stop the engine in an emergency，simply turn the engine switch to the OFF position。
Under normal conditions，use the following procedure.

1 .Move the throttle lever to the SLOW position.

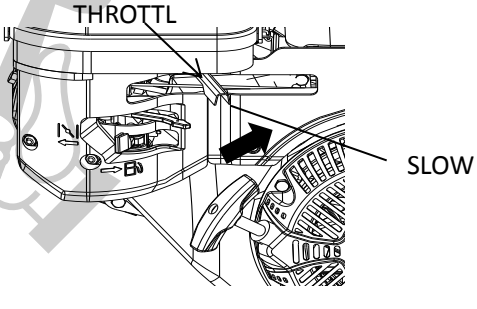

магазин БАШ МАЙСТОРА® професионални решения

2 .Turn the engine switch to the OFF position

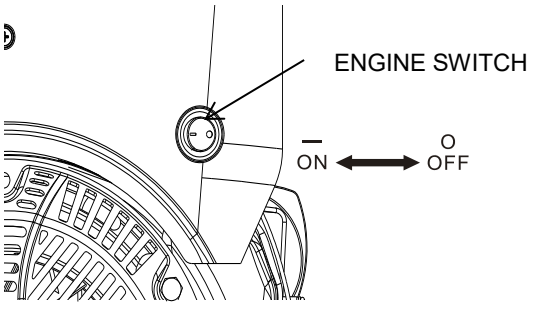

3 .Turn the fuel valve lever to the OFF position. when the pump is not in use，leave the fuel valve lever in the OFF position to prevent carburetor flooding and to reduce the possibility of fuel leakage.

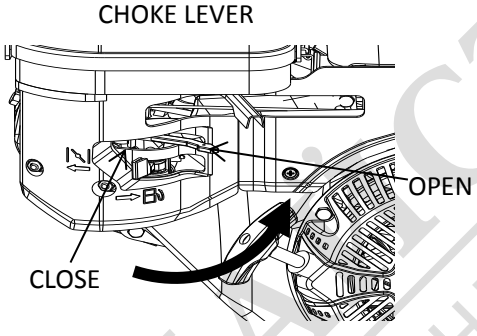

After use，remove the pump drain plug，and drain the pump chamber. Remove the filler cap，and flush the pump chamber with clean，fresh water. Allow the water to drain from the pump chamber, then reinstall the filler cap and drain plug.

SERVICING THE PUMP

THE IMPORTANCE OF MAINTENANCE

Good maintenance is essential for safe，economical，and trouble-free operation. It will also help reduce air pollution.

> **WARNING!**
> Improperly maintaining this pump，or failure to correct a problem before operation，can cause a malfunction in which you can be seriously hurt or killed.
> Always follow the inspection and maintenance recommendations and schedules in this owner's manual.

To help you properly care for your pump，the following pages include a maintenance schedule，routine inspection procedures, and simple maintenance procedures using basic hand tools. Other service tasks that are more difficult, or require special tools，are best handled by professionals and are normally performed by a qualified mechanic.

The maintenance schedule applies to normal operating conditions. If you operate your engine under unusual conditions，such as sustained high- load or high-temperature operation，or use in unusually wet or dusty conditions，consult your. servicing dealer for

recommendations applicable to your individual needs and use.

Maintenance，replacement or repair of emission control devices and systems may be done by any engine repair establishment or individual，using parts that are "certified" to EPA standards.

MAINTENANCE SAFETY

Some of the most important safety precautions follow. However, we cannot warn you of every
conceivable hazard that can arise in performing maintenance. Only you can decide whether or not you should perform a given task.

SAFETY PRECAUTIONS

● Make sure the engine is off before you begin any maintenance or repairs. This will eliminate
several potential hazards:

- **Carbon monoxide poisoning from engine exhaust.**
  Be sure there is adequate ventilation whenever you operate the engine.
- **Burns from hot parts.**
  Let the engine and exhaust system cool before touching.
- **Injury from moving parts.**
  Do not run the engine unless instructed to do so.

● Read the instructions before you begin，and make sure you have the tools and skills required.

● To reduce the possibility of fire or explosion，be careful when working around gasoline. Use only a nonflammable solvent, not gasoline，to clean parts。Keep cigarettes, sparks and flames away from all fuel-related parts.

магазин БАШ МАЙСТОРА® професионални решения

MAINTENANCE SCHEDULE

To ensure the best quality and reliability，use only new, original replacement parts or their equivalents for repair and replacement.

Perform at every indicated month or operating hour interval, whichever comes first. / REGULAR SERVICE PERIOD (3) ITEM			Each use	First month or 20 Hours	Every 3 months or 50 Hours	Every 6 months or 100 Hours	Every year or 300 Hours
•	Engine oil	Check level	✓				
		Change		✓		✓	
	Reduction gear oil (applicable types)	Check level	✓				
		Change		✓		✓	
•	Air filter	Check	✓				
		Clean			✓ (1)	✓ (1)	
		Replace					✓
•	Sediment cup	Clean				✓	
•	Sparkplug	Check-adjust				✓	
		Replace					✓
	Spark arrester (optional parts)	Clean				✓	
•	Idle speed	Check-adjust					✓ (2)
•	Valve clearance	Check-adjust					✓ (2)
•	Combustion chamber	Clean	After every 500 Hours (2)				
•	Fuel tank & filter	Clean				✓ (2)	
•	Fuel tube	Check	Every 2 years (Replace if necessary) (2)				
•	Impeller	Check					✓ (2)
•	Impeller clearance	Check					✓ (2)
•	Pump inlet valve	Check					✓ (2)

● Emission-related items

(1) Service more frequently when used in dusty areas.

(2) These item should be serviced by a qualified mechanic, unless you have the proper tools and are mechanically proficient.

(3) For commercial use, log hours of operation to determine proper maintenance intervals.

Магазин БАШ МАЙСТОРА професионални решения

REFUELING

With the engine stopped and on a level surface，remove the fuel tank cap and check the fuel level. Refill the tank if the fuel level is low.

Gasoline is highly flammable and explosive.
You can be burned or seriously injured when handling fuel.

- Stop the engine and keep heat，sparks，and flame away.
- Handle fuel only outdoors.
- Wipe up spills immediately.

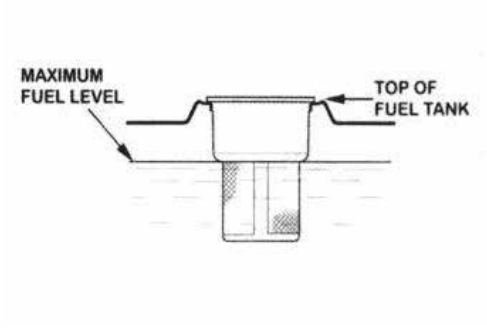

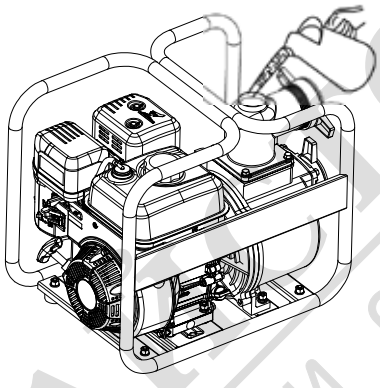

Refuel in a well-ventilated area before starting the engine。If the engine has been running，allow it to cool. Refuel carefully to avoid spilling fuel. Do not fill the fuel tank completely. Fill tank to approximately 1 inch below the top of the fuel tank to allow for fuel expansion. It may be necessary to lower the fuel level depending on operating conditions. After refueling，tighten the fuel tank cap securely.

Never refuel the engine inside a building where gasoline fumes may reach flames or sparks. Keep gasoline away from appliance pilot lights，barbecues，electric appliances，power tools，etc. Spilled fuel is not only a fire hazard，it causes environmental damage. Wipe up spills immediately.

Notice: Fuel can damage paint and plastic. Be careful not to spill fuel when filling your fuel tank. Damage caused by spilled fuel is not covered under warranty.

FUEL RECOMMENDATIONS

Use unleaded gasoline with a pump octane rating of 88 or higher.
These engines are certified to operate on unleaded gasoline. Unleaded gasoline produces fewer engine and spark plug deposits and extends exhaust system life.
Never use stale or contaminated gasoline or an oil/gasoline mixture. Avoid getting dirt or water in the fuel tank.
Occasionally you may hear a light “knocking” or “pinging” (metallic rapping noise) while operating under heavy loads，This is no cause for concern.
If knocking or pinging occurs at a steady engine speed，under normal load，change brands or use a higher octane of gasoline. If knocking or pinging persists，see an authorized qualified mechanic.

Notice: Running the engine with persistent knocking or pinging can cause engine damage. Running the engine with persistent knocking or pinging is considered misuse, and the warranty does not cover parts damaged by misuse.

OIL RECOMMENDATIONS

Oil is a major factor affecting performance and service life. use 4-stroke automotive detergent oil SAE 10W-30 is recommended for general use. Other viscosities shown in the chart may be used when the average temperature in your area is within the recommended range.

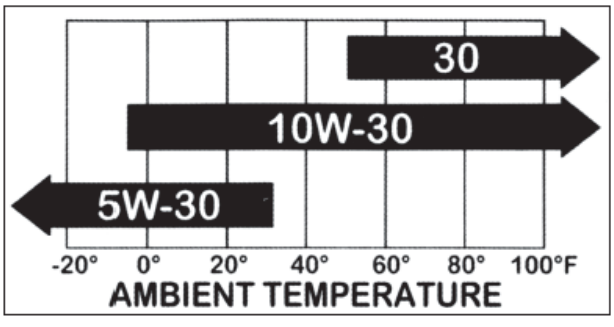

The SAE oil viscosity and service classification are in the AP label on the oil container. The manufacture recommends that you use API SERVICE category SJ or SL oil.

OIL LEVEL CHECK

Check the engine oil level with the engine stopped and in a level position.

1. Remove the filler cap/dipstick and wipe it clean.
2. Insert and remove the dipstick with out screwing it into the filler neck，Check the oil level shown on the dipstick.
3. If the oil level is low，fi}l to the edge of the oil filler hole with the recommended oil.
4 .Screw in the filler cap/dipstick securely.

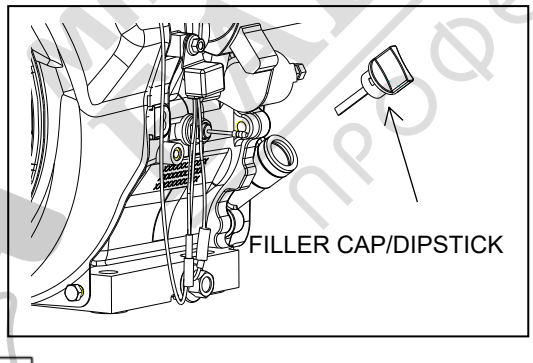

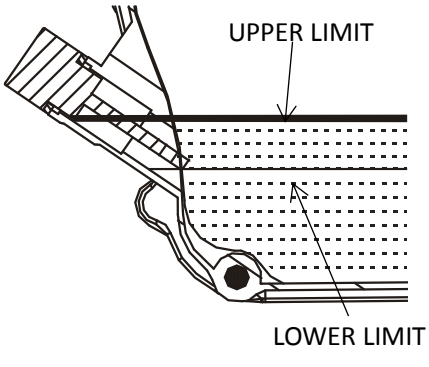

Notice: Running the engine with a low oil level can cause engine damage.

The oil sensor will automatically stop the engine before the oil level falls below safe limit. However, to avoid the inconvenience of an unexpected shutdown，always check the engine oil level before startup.

OIL CHANGE

Drain the used oil while the engine is warm. Warm oil drains quickly and completely.

1 .Place a suitable container below the engine to catch the used oil，then remove the filler cap/dipstick，drain plug，and washer.

2 .Allow the used oil to drain completely，then reinstall the drain plug，washer, and tighten drain plug securely.

Please dispose of used motor oil in a manner that is compatible with the environment. We suggest you take used oil in a sealed container to your local recycling center or service station for reclamation. Do not throw it in the trash; pour it on the ground，or down a drain.

3 .With the engine in a level position，fill to the outer edge of the oil filler hole with the recommended oil.

Notice: Running the engine with a low oil level can cause engine damage.

The oil sensor will automatically stop the engine before the oil level falls below the safe limit. However, to avoid the inconvenience of an unexpected shutdown，fill to the upper limit, and check the Oil level regularly.

4 .Screw in the filler cap/dipstick securely.

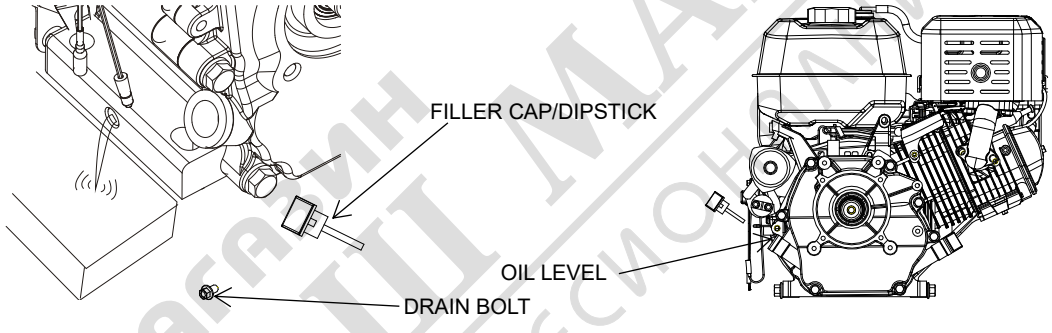

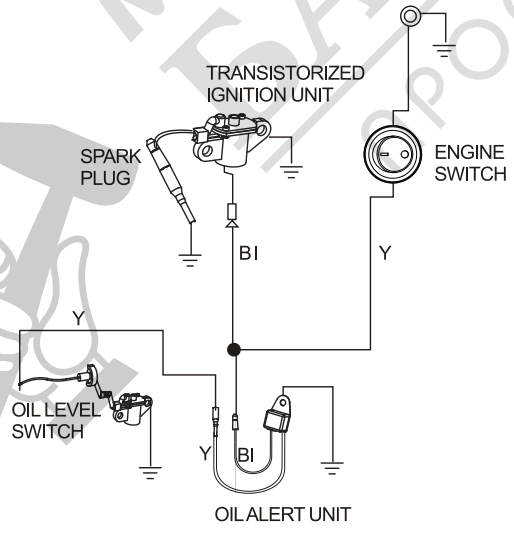

AIR FILTER INSPECTION & SERVICE

A dirty air filter will restrict air flow to the carburetor, reducing engine performance. If you operate the engine in very dusty areas，clean the air filter more often than specified in the MAINTENANCE SCHEDULE.

Notice: Operating the engine without an air filter, or with a damaged air filter, will allow dirt to enter the engine，causing rapid engine wear. This type of damage is not covered by the warranty.

1 .Remove the wing nut，and remove the air cleaner cover.

2 .Carefully remove plastic grid from bottom of the cover.

3 .Carefully remove the foam air filter from the cover. Wash the filter in warm，soapy water，rinse，and allow to dry thoroughly.

4 .wipe dirt from the inside of the air cleaner base and cover，using a moist rag. Be careful to prevent dirt from entering the air duct that leads to the carburetor.

5 .Insert the cleaned，dry or new foam air filter in the cover and replace plastic grid.

6 .Reinstall the air cleaner assembly. Be sure the gasket is in pace beneath the air filter,

7 .Tighten the air filter wing nut securely.

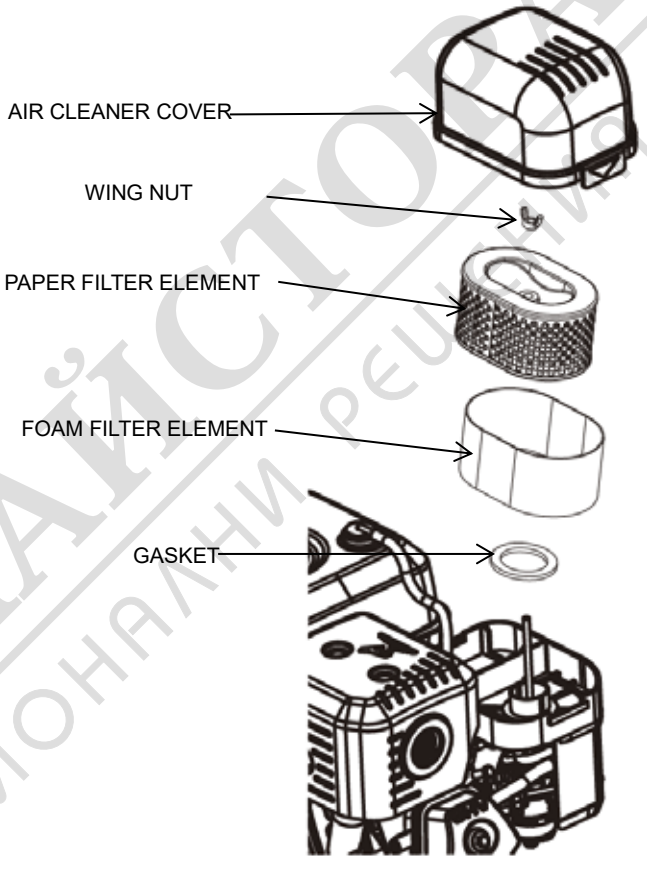

МАГАЗИН БАШ МАЙСТОРА ПРОФЕСИОНАЛНИ РЕШЕНИЯ

SEDIMENT CUP CLEANING

1 .Move the fuel valve to the OFF position，then remove the fuel sediment cup and 0-ring.

Gasoline is highly flammable and explosive.
You can be burned or seriously injured when handling fuel.
●Stop the engine and keep heat, sparks，and flame away.
●Handle fuel only outdoors.
●Wipe up spills immediately.

2 .Wash the sediment cup and o-ring in nonflammable solvent, and dry them thoroughly.
3 .Place the o-ring in the fuel valve，and install the sediment cup. Tighten the sediment cup securely.
4 .Move the fuel valve to the ON position，and check for leaks. Replace the o-ring if there is any leakage.

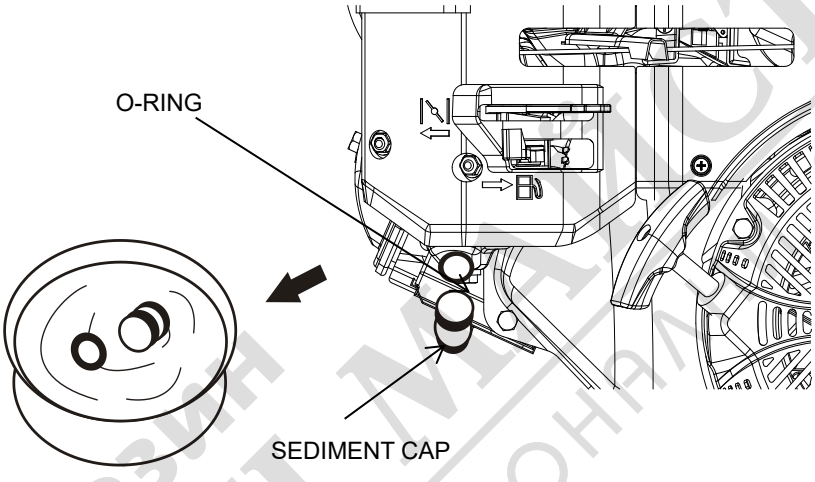

магазин БАШ МОТОРА® профессиональные решения

SPARK PLUG SERVICE

Recommended spark plugs: F7TJC F5T or F6TJC or other equivalents

Notice: An incorrect spark plug can cause engine damage.

1 .Disconnect the spark plug cap，and remove any dirt from around the spark plug area.
2 .Remove the spark plug with a 13/16 inch spark plug wrench.

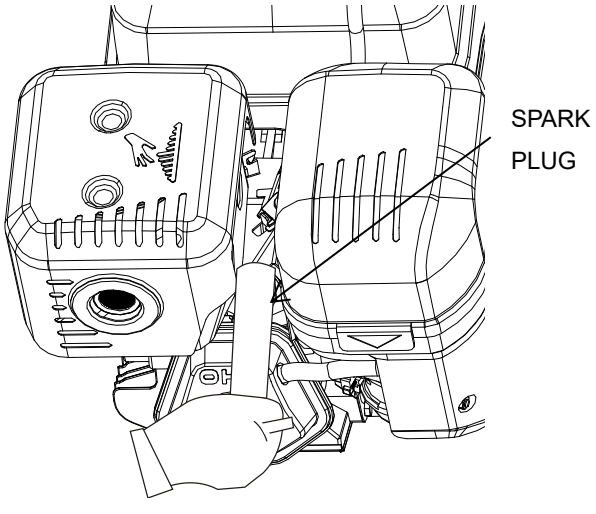

3. Inspect the spark plug. Replace it if the electrodes are worn，or if the insulator is cracked or chipped.
4 .Measure the spark plug electrode gap with a suitable gauge. The gap should be 0.028-0.031 in. Correct the gap，if necessary，by carefully bending the electrode.
5 .Install the spark plug carefully, by hand，to avoid cross- threading.
6 .After the spark plug is seated，tighten with a 13/16-inch spark plug wrench to compress the sealing washer. If reinstalling the used spark plug，tighten 1/8-1/4 turn after the spark plug is seated.
If installing a new spark plug, tighten 1/2 turn after the Spark plug is seated.

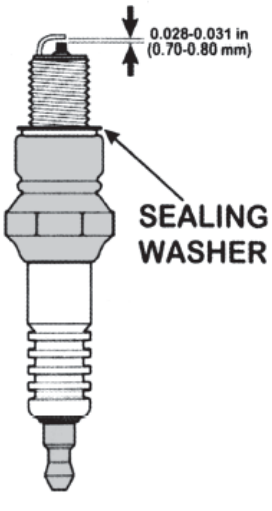

Notice: A loose spark plug can overheat and damage the engine. Over-tightening the spark plug can damage the threads in the cylinder head.

7 .Attach the span plug cap.

МАЙСТОРА
БАШ МАЙСТОРА
ПРОФЕСИОНАЛНИ РЕШЕНИЯ

IDLE SPEED ADJUSTMENT

1.Start the engine outdoors，and allow it to warm up to operating temperature.

Notice: Dry operation will damage the pump seal. Be sure the pump chamber is filled with water before starting the engine.

2 .Move the throttle lever to its slowest position.

3 .Turn the throttle stop screw to obtain the standard idle speed.

Standard idle speed: $1{,}400^{+200}_{-105}$ rpm

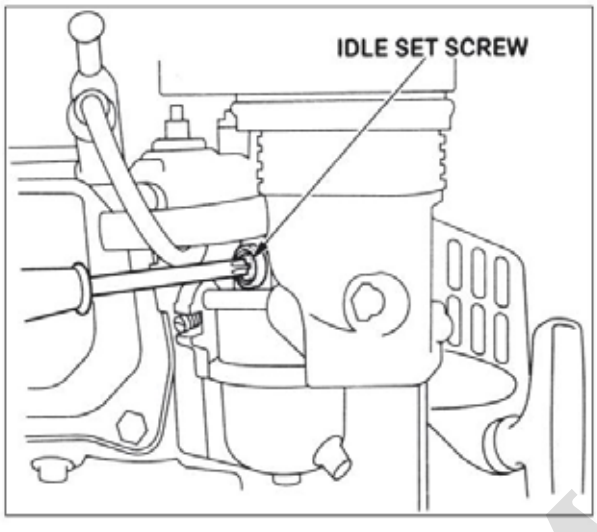

МАГАЗИН БАШ МАЙСТОРА ПРОФЕСИОНАЛНИ РЕШЕНИЯ

STORING THE PUMP

Proper storage preparation is essential for keeping your pump trouble free and looking good. The following steps will help to keep rust and corrosion from impairing you pump's

function and appearance, and will make the pump easier to start when you use the pump again.

CLEANING

1. If the engine has been running，allow it to cool for at least half an hour before cleaning.
2 .Wash the engine and pump.
Wash the engine by hand，and be careful opening. Keep water away from controls promotes rust. to prevent water from entering the air cleaner or muffler and all other places that are difficult to dry，as water promotes rust.

Notice:

●Using a garden hose or pressure washing equipment can force wafer into the air cleaner or muffler opening. Water in the air cleaner will soak the air filter, and water that passes through the air filter or muffler can enter the cylinder, causing damage.

●Water contacting a hot engine can cause damage. If the engine has been running, allow it to cool for at least half an hour before washing.
3 .Wipe dry all accessible surfaces.
4. Fill the pump chamber w 曲 clean，fresh water, start the engine outdoors, and let it run until it reaches normal operating temperature to evaporate any external water.

Notice: Dry operation will damage the pump seal. Be sure the pump chamber is filled with water before scarfing the engine.

5. Stop the engine，and allow it to cool，
6. Remove the pump drain plug，and flush the pump with clean，fresh water. Allow the water to drain from the pump chamber, then reinstall the drain plug.
7. After the pump is clean and dry, touch up any damaged paint, and coat areas that may rust with a light film of oil. Lubricate controls with a silicone spray lubricant.

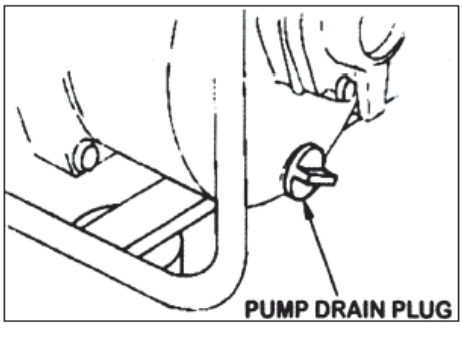

FUEL

Gasoline will oxidize and deteriorate in storage. Old gasoline will cause hard starting，and it leaves
gum deposits that clog the fuel system. If the gasoline in your engine deteriorates during storage，you may need to have the carburetor and other fuel system components serviced or replaced.

The length of time that gasoline can be left in your fuel tank and carburetor without causing functional problems will vary with such factors as gasoline blend， your storage temperatures，and whether the fuel tank is partially or completely filled. The air in a partially filled fuel tank promotes fuel deterioration。Very warm storage/temperatures accelerate fuel deterioration. Fuel deterioration problems may occur within a few months，or even less if the gasoline was not fresh when you filled the fuel tank.

The Warranty does not cover fuel system damage or engine performance problems resulting from neglected storage preparation.

You can extend fuel storage life by adding a fuel stabilizer that is formulated for that purpose，or you can avoid fuel deterioration problems by draining the fuel tank and carburetor.

ADDING A FUEL STABILIZER TO EXTEND FUEL STORAGE LIFE

When adding a fuel stabilizer, fill the fuel tank with fresh gasoline. If only partially filled，air in the tank will promote fuel deterioration during storage。If you keep a container of gasoline for refueling，be sure that it contains only fresh gasoline.

1 .Add fuel stabilizer following the manufacturer's instructions.
2 .After adding a fuel stabilizer, run the engine outdoors for 1 0 minutes to be sure that treated gasoline has replaced the untreated gasoline in the carburetor.

Notice: Dry operation will damage the pump seal. Be sure the pumpchamber is filled with water before starting the engine.

3 .Stop the engine，and move the fuel valve to the OFF position.

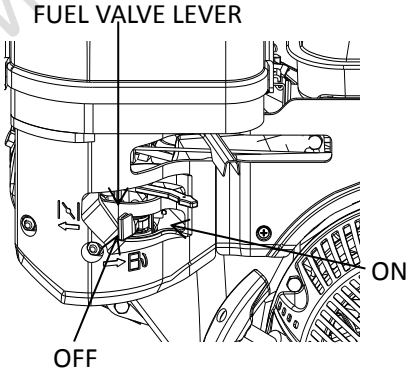

DRAINING THE FUEL TANK AND CARBURETOR

1 .Place an approved gasoline container below the carburetor，and use a funnel to avoid spilling fuel.
2 .Remove the carburetor drain bolt and sediment cup，then move the fuel valve lever to the ON position.

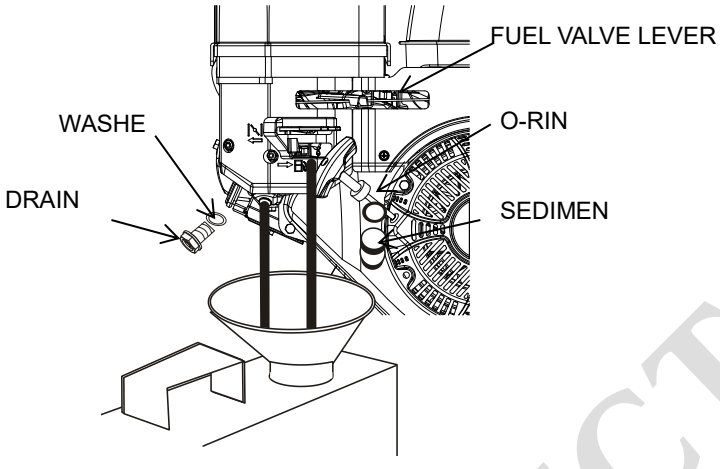

Gasoline is highly flammable and explosive. You can be burned or seriously injured when handling fuel.
- Keep heat，sparks，and flame away.
- Handle fuel only outdoors.
- Wipe up spills immediately.

3 .After all the fuel has drained into the container，reinstall the drain bolt and sediment cup. Tighten them securely.

ENGINE OIL

1 .Change the engine oil.
2 .Remove the spark plug.
3 .Pour a tablespoon of clean engine oil into the cylinder.
4 .Pull the starter rope several times to distribute the of}in the cylinder.
5 .Reinstall the spark plug，
6 .Pull the starter rope slowly until resistance is felt and the notch on the starter pulley aligns with the hole at the top of the recoil starter cover. This will close the valves so moisture cannot enter the engine cylinder. Return the starter rope gently.

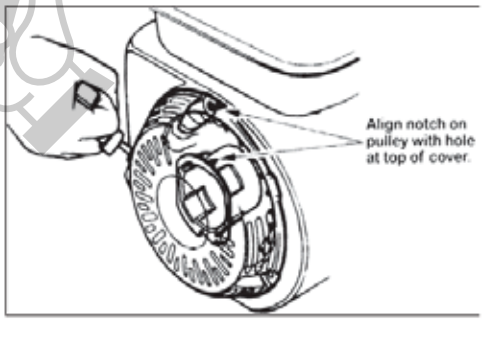

STORAGE PRECAUTIONS

If your pump will be stored with gasoline in the fuel tank and carburetor, it is important to reduce the hazard of gasoline vapor ignition. Select a well-ventilated storage area away from any appliance that operates with a flame，such as a furnace，water heater，or clothes dryer. Also avoid any area with a spark-producing electric motor, or where power too}s are operated.

If possible，avoid storage areas with high humidity，because that promotes rust and corrosion.

Unless all fuel has been drained from the fuel tank，leave the fuel valve lever in the OFF position to reduce the possibility of fuel leakage.

Position the pump so that it is level. Tilting can cause fuel or oil leakage.

With the engine and exhaust system coo!，cover the pump to keep out dust. A hot engine and exhaust system can ignite or melt some materials. Do not use sheet plastic as a dust cover. A nonporous cover will trap moisture around the engine，promoting rust and corrosion.

REMOVAL FROM STORAGE

Check your pump as described in the BEFORE OPERATION chapter of this manual.

If the fuel was drained during storage preparation，fill the tank with fresh gasoline. If you keep a

container of gasoline for refueling，be sure that it contains only fresh gasoline. Gasoline oxidizes and deteriorates over time，causing hard starting.

If the cylinder was coated with oil during storage preparation，the engine may smoke briefly at startup. This is normal.

TRANSPORTING

If the pump has been running，allow it to cool for at least 15 minutes before loading the pump on the transport vehicle. A hot engine and exhaust system can burn you and can ignite some materials.

Keep the pump level when transporting to reduce the possibility of fuel leakage. Move the fuel valve lever to the OFF position.

CARBURETOR MODIFICATION FOR HIGH ALTITUDE OPERATION

At high altitude，the standard carburetor air-fuel mixture will be too rich. Performance will decrease，and fuel consumption will increase. A very rich mixture will also foul the spark plug and cause hard starting .Operation at an altitude that differs from that at which this engine was certified，for extended periods of time，may increase emissions.

High altitude performance can be improved by specific modifications to the carburetor. If you always operate your engine at altitudes above 5,000 feet(1,500 meters)，have a qualified mechanic perform this carburetor modification. This engine，when operated at high altitude with the carburetor modifications for high altitude use，will meet each emission standard throughout its useful life.

Even with carburetor modification，engine horsepower will decrease about 3.5%for each，000-foot (300-meter) increase in altitude. The effect of attitude on horsepower will be greater than this if no carburetor modification is made.

Notice: When the carburetor has been modified for high altitude operation, the air-fuel mixture will be too lean for low altitude use. Operation at altitudes below 5,000 feet(1,500 meter) with a modified carburetor may cause the engine to overheat and result in serious engine damage. For use at low altitudes, have a qualified mechanic return the carburetor to original factory specification.

TROUBLESHOOTING

PROBLEM	POSSIBLE CAUSE	CORRECTION
Engine Will Not Start	1 .Fuel valve OFF. 2 .Choke OPEN. 3 .Engine switch OFF. 4. Out of fuel. 5.Bad fuel; engine stored without treating or draining gasoline，or refueled with bad gasoline. 6.Spark plug faulty，fouled，or improperly gapped. 7.Spark plug wet with fuel (flooded engine). 8.Fuel filter clogged，carburetor malfunction, ignition malfunction，valves stuck, etc.	1. Move fuel valve lever to ON. 2. Move choke lever to CLOSED unless engine is warm. 3 .Turn engine switch to ON. 4 .Refuel. 5. Drain fuel tank and carburetor. Refuel with fresh gasoline. 6 .Remove and inspect spark plug. Clean，gap，or replace spark plug. 7.Remove and inspect spark plug. Dry and reinstall spark plug .Start engine with throttle lever in FAST position. 8.Take engine to a qualified mechanic. Replace or repair faulty components as necessary.
Engine Lacks Power	1 .Filter element(s) clogged. 2.Bad fuel; engine stored without treating or draining gasoline，or refueled with bad gasoline， 3.Fuel filter clogged，carburetor Malfunction, ignition malfunction，valves stuck，etc.	1.Check air filter. Clean or replace filter. 2.Drain fuel tank and carburetor. Refuel with fresh gasoline. 3.Take engine to a qualified mechanic. Replace or repair faulty components as necessary·
No Pump Output	1 .Pump not primed. 2.Hose collapsed，cut or punctured. 3.Strainer not completely underwater. 4 .Air leak at connector. 5.Strainer clogged. 6.Excessive head.	1 .Prime pump. 2 .Replace suction hose. 3.Sink the strainer and the end of a suction hose completely underwater. 4 .Replace sealing washer if missing or damaged. Tighten hose connector and clamp. 5 .Clean debris from Strainer. 6 .Relocate pump and/or hoses to reduce head.
Low pump output	1.Hose collapsed, damaged, too long or diameter too small. 2. air leak at connector 3 .Strainer clogged. 4.Hose damaged，too long，or diameter too small. 5 .Marginal head.	1 .Replace suction hose. 2 .Replace sealing washer if missing or damaged. Tighten hose connector and clamp. 3.Clean debris from strainer. 4 .Replace discharge hose. 5 .Relocate pump and/or hoses to reduce head.

магазин БАШ МАЙСТОРА® профессиональные решения