NAVIMOW

SEGWAY

Navimow i2 AWD

User Manual

МАГАЗИН МАЙСТОРА®
БИТЕ МОНТАНИ РЕШЕНИЯ
ПРОФЕСИОНАЛНИ

260109-A

Table of Contents

1. Safety Instructions 1
- 1.1 Safety Warnings 1
- 1.2 Symbols and Decals 3

2. Product Overview 4
- 2.1 Inside the Box 4
- 2.2 Parts and Functions 5
- 2.3 Specifications 8
- 2.4 Accessories (Sold Separately) 9

3. Installation 10
- 3.1 Before You Start 10
- 3.2 Activate the Mower 10
- 3.3 Use Network RTK Service (Recommended) 11
- 3.4 Install the Antenna (Optional) 11
- 3.5 Assemble the Charging Station 13
- 3.6 Update Navimow OS 14

4. Operation 15
- 4.1 Create Map 15
- 4.2 Mow 19
- 4.3 Basic Functions 22
- 4.4 Safety Features 23
- 4.5 Advanced Features 24

5. Maintenance 26
- 5.1 Cleaning 26
- 5.2 Replace Blades 26
- 5.3 Transportation 27
- 5.4 Battery and Power Supply 27
- 5.5 Storage and Restorage 30

6. Warranty and Compliance 31
- 6.1 Sensors and Interfaces 31
- 6.2 EC Declaration of Conformity 32
- 6.3 Limited Warranty 34
- 6.4 Certifications 38

7.Contact Us 41

Магазин БАШ МАЙСТОРА® професионални решения

Welcome

Thank you for choosing Navimow i2 AWD!

Navimow i2 AWD is powered by the cutting-edge AWD technology and the Network RTK service, delivering powerful traction and high-precision navigation across challenging lawns. It conquers slopes with built-in ESC stability control, protects turf with zero-turn pivoting, and also leverages all-wheel power to extend runtime. Relax and enjoy a perfectly cut lawn while Navimow takes care of the rest.

МАГАЗИН БАШ МАЙСТОРА®
ПРОФЕСИОНАЛНИ РЕШЕНИЯ

1. Safety Instructions

1.1 Safety Warnings

IMPORTANT
READ CAREFULLY BEFORE USE
KEEP FOR FUTURE REFERENCE

1)Be sure to install and operate the Navimow (referred to as the mower in the manual) and the charging station according to the instructions. Go to navimow.com for the complete User Manual and the latest user materials.
2)The mower is for consumer use only. Using the mower for purposes other than mowing can bring serious injury. To avoid risks of injuries, please read and understand all the warnings and cautions. Please understand that you can reduce the risk by following the instructions and warnings in this manual, but you cannot eliminate all the risks. The operator or user is responsible for accidents or hazards occurring to other people on their property.
3)Navimow has many built-in safety sensors, however, safety risks still exist. Set a mowing time when there are no people or pets on the lawn. Inform the neighbors about the risks for accidents or hazards.
4)DO NOT modify the mower by yourself. Modifications could interfere with mower operations, result in serious injury and/or damage, or void the Limited Warranty. Use only Navimow approved parts and accessories.
5)The manufacturer recommends the user to be 18–70 years old. Be sure to get the necessary training before operating the machine.

⚠ WARNING
Never allow children, persons with reduced physical, sensory or mental capabilities or lack of experience and knowledge or people unfamiliar with these instructions to use the machine. Local regulations may restrict the age of the operator.

Before Mowing:
- Regularly check that all parts of the mower can function normally.
- For the best mowing results, it is recommended to mow in dry weather. Mowing in the rain can make the grass stick on the product and the mower may slip. DO NOT mow in bad weather, such as heavy rain, thunderstorm or snow.
- Periodically inspect the area where the machine is to be used and remove all stones, sticks, wires, bones, and other foreign objects. The Limited Warranty does not cover damages caused by objects left on the lawn.
- To avoid possible damage, keep the operating mower at least 1 m (3 feet) away from sprinkler heads. The mower and the sprinkler should NOT work simultaneously. Adjust the mowing schedule so that it works at a different time than any sprinklers.
- NEVER allow children to touch the power supply unit, charging station, blades, the battery compartment, or any parts with gaps such as the wheels.

⚠ WARNING
Never operate the machine or its accessories if the guards or shields are damaged, or if the cord is damaged or worn.

When Mowing:
- Keep away from the rotating blades! DO NOT put hands or feet under or near the rotating blades.
- Watch out for small flying objects or stones during mowing. Keep a safe distance from the mower when operating.
- DO NOT leave the machine to operate unattended if you know that there are pets, children or people in the vicinity.
- DO NOT reach beyond the capabilities of the mower. If you are remotely controlling the mower and its accessories, it is recommended to do so from a seated or stationary position. If you are standing or walking during operation, keep your balance and watch your steps.

МАГАЗИН БАШ МАЙСТОРА ПРОФЕСИОНАЛНИ РЕШЕНИЯ

⚠ **WARNING**

- DO NOT allow children to be in the vicinity or play with the machine when it is operating.
- DO NOT lift the mower in operation. DO NOT ride on the mower.
- DO NOT mow on areas with slopes steeper than the maximum incline inside the working area (45%), as well as the boundary (45%).
- If the mower makes an abnormal sound or signals an alarm, press the STOP button immediately.
- If there are abnormal vibrations, turn off the mower, place it on level ground for about 30 seconds and then restart. If the issue persists, contact authorized after-sales service.
- DO NOT touch moving hazardous parts before they have come to a complete stop.

Safe Usage:

- DO NOT operate or charge the mower outside the temperature limits: 0–40°C (32–104°F), because low/high temperatures can decrease mower performance and even lead to accidents.
- DO NOT place anything on the mower or the charging station.
- It is recommended to conduct regular maintenance of the mower (See Maintenance in the User Manual) by an adult.
- Regularly check the warning devices to ensure they are effective. These devices include the buzzer, the LED light on the charging station, and the ambient light on the mower.
- Before charging, please read How to Charge in User Manual. Improper use may cause electric shock, overheating, or leakage of corrosive liquid.
- Use only the original battery pack or that of the same model as specified by Navimow. Each mower contains one battery pack. Depending on the specific mower model, the rated capacity of the battery is 2.55 Ah and 5.1 Ah. Contact after-sales service and have a professional technician to replace the battery pack.
- DO NOT use non-rechargeable batteries. For the purposes of recharging the battery, only use the detachable supply unit provided with this appliance. For the European Union and Norway: NBW32D002D5N-EU; For the United Kingdom: NBW32D002D5N-UK; For Switzerland: NBW32D002D5N-CH.
- DO NOT dismantle or puncture the battery casing. Keep away from metal objects to prevent short circuit. Keep away from fire, heat and direct sunlight.
- For information about battery and electrical waste, please contact your household waste disposal service, your local or regional waste management office, or your point-of-sale.
- When replacing the blades, please be careful and wear protective gloves as the blades may cause damage.
- If the cord on the power supply becomes damaged or entangled during use, disconnect the power supply from the power socket and then untangle. To avoid a hazard, pull the body of the plug rather than the cord when separating the power supply from the power socket.
- Contact after-sales service and have a professional technician to repair or replace the cord. When cleaning, inspecting for damage, or checking for abnormalities, the mower must be powered off, and the charging station must be unplugged from the power supply.

Магазин БАШ МАЙСТОРА® професионални решения

1.2 Symbols and Decals

Please study the symbols on the product and labels carefully and understand their meaning:

⚠ WARNING-Read instruction manual before operating the machine.

⚠ WARNING-Do not touch rotating blade.

⚠ WARNING-Keep a safe distance from the machine when operating.

⚠ WARNING-Do not ride on the machine.

⚠ WARNING-Operate the disabling device before working on or lifting the machine*.

* The disabling device hereby refers to the safety lock. Before lifting or operating the mower, enable the safety lock by pressing MOW+HOME for more than 3 seconds.

⚠ WARNING-It is not permitted to dispose of this product as normal household waste. Ensure that the product is recycled in accordance with local legal requirements.

магазин БАШ МАЙСТОРА® професионални решения

2. Product Overview

2.1 Inside the Box

If there are missing or defective parts, please contact after-sales service. We recommend retaining the package materials for future transportation and shipping.

- **Navimow i2 AWD**

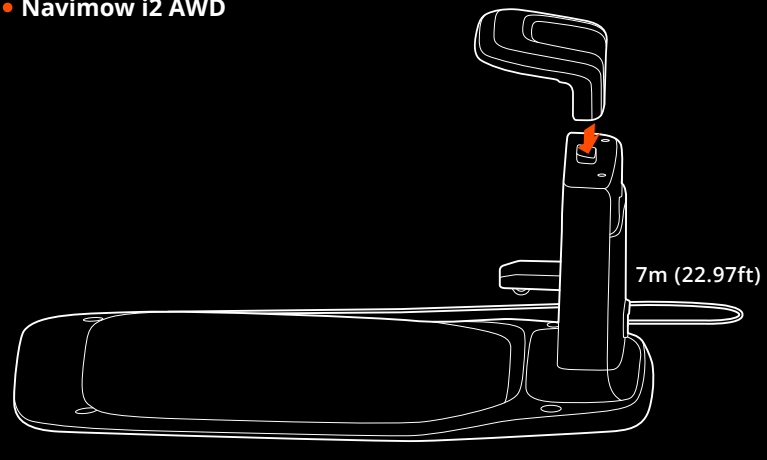

× 1

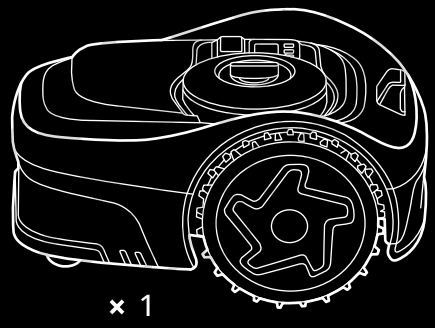

× 1

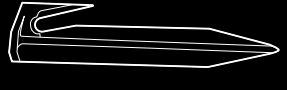

× 4

× 1

× 4

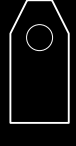

× 5

× 5

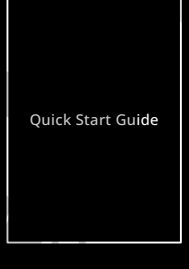

× 1

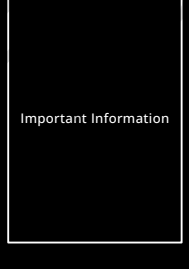

× 1

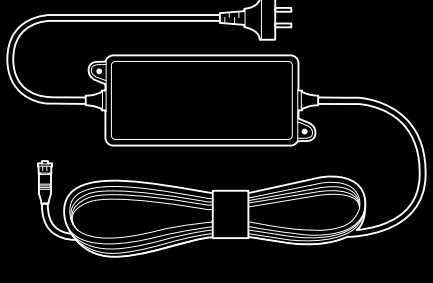

× 1

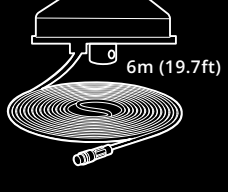

× 1

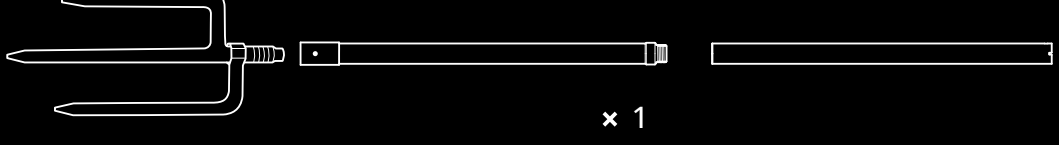

× 1

× 5

2.2 Parts and Functions

2.2.1 Mower

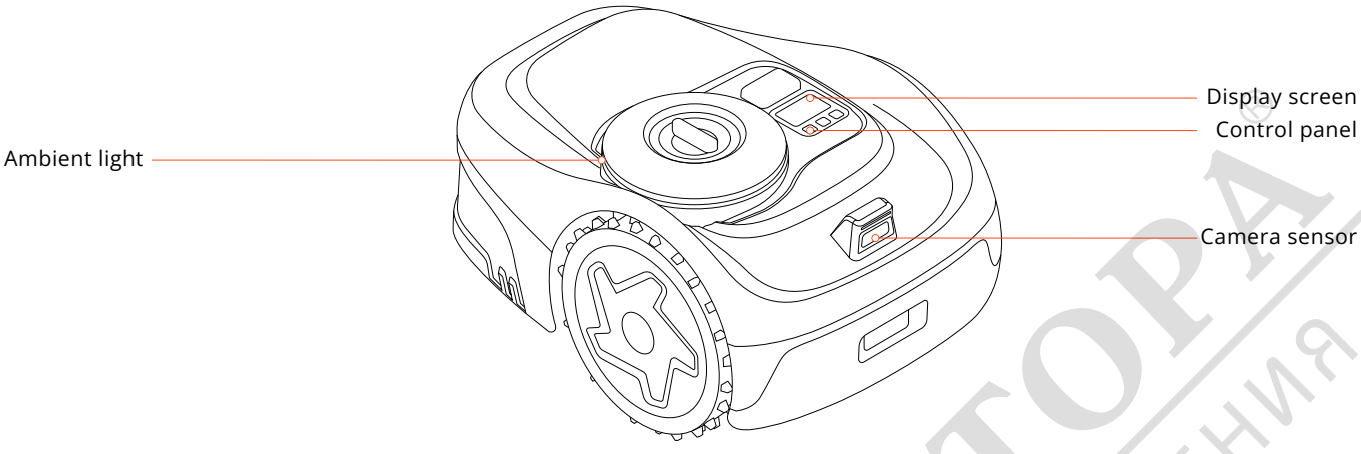

- Control panel: Use the buttons to start mowing, lock/unlock the mower, send the mower for recharge, and other basic operations.
- Display screen: Shows the mower status, battery status, network connection, Bluetooth connection, and lock status.
- Ambient light: Shows different status of the mower based on different lighting effects.
- Camera sensor: Detects non-grass objects to avoid bumping into them.

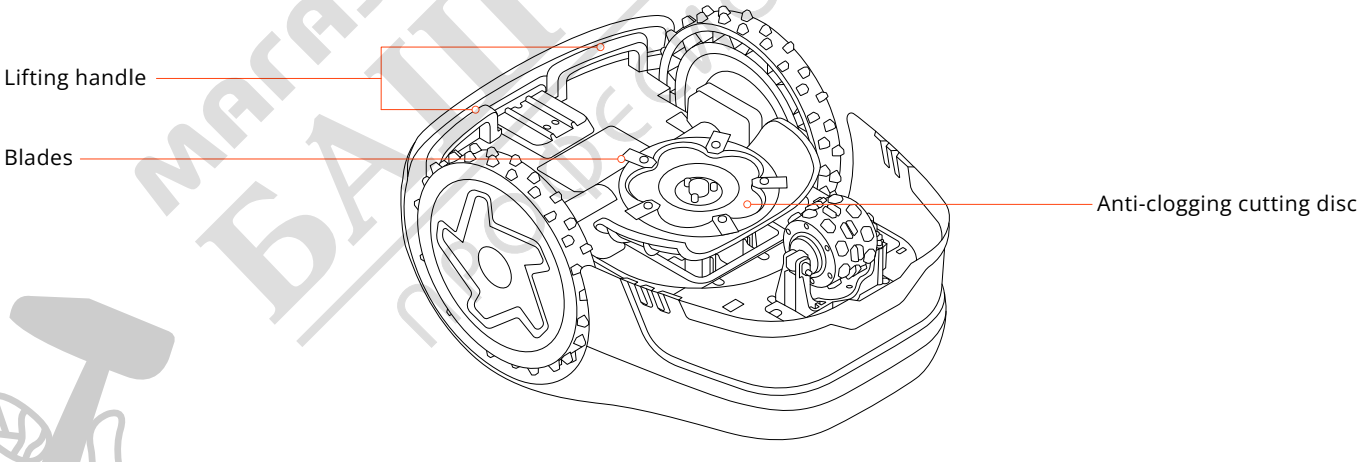

- Lifting handle: Use it to lift the mower up when necessary.
- Blades: The blades can rotate freely after being attached to the cutting disc. During mowing, they swing outward to cut the grass. When hitting an obstacle, they fold inward for protection.
- Anti-clogging cutting disc: Reduces chances of grass clippings getting stuck in the blades, so the blades can be used for a longer time.

МАГАЗИН БАШ МАЙСТОРА ПРОФЕСИОНАЛНИ РЕШЕНИЯ

2.2.2 Display and Control

Icon with light on		Meaning
Battery level		**50%–100%** solid green
		20%–49% solid yellow
		5%–19% solid red
		Less than **5%** red flashing. When the battery level is low, the mower will return to the station and charge.
PIN code lock		Mower locked. Please enter the PIN code to unlock, otherwise the mower won't be able to work.
Network connection		Connected to internet via Wi-Fi or cellular network.
Bluetooth		Bluetooth connected.
Blade indicator		Blade disc is rotating. Please stay away.
Dashboard display	Mapping	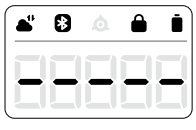
	Mowing progress	
	Battery level	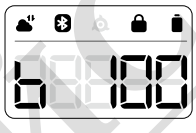
	The mower is stopped	

Basic operation	Instruction
Power on	Press OK.
Power off	Press and hold OK for 3s. The mower cannot be turned off when it's in the charging station. When the mower is turned off, you will hear a sound, display on the mower and the ambient light will be off.
Start mowing	Press MOW and then OK.
Stop mower operation	Press STOP.
Send mower to the charging station	Press HOME and then OK.
Restart the mower	Power it off first, then press OK, or push the mower into the charging station.
Lock the mower	Press and hold MOW+HOME for 3s.
Unlock the mower	Enter the PIN code.
Force to reboot the mower	Press OK for more than 10s.

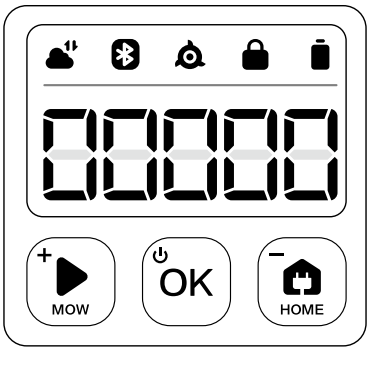

Магазин БАШ МАЙСТОРА профессиональные решения

2.2.3 PIN Code

If the mower has been locked, enter the PIN code before operating the mower. The default code is 0000. Press MOW or HOME to change the number and press OK to confirm the code. You can change the PIN code by increasing or decreasing the numbers on the control panel.

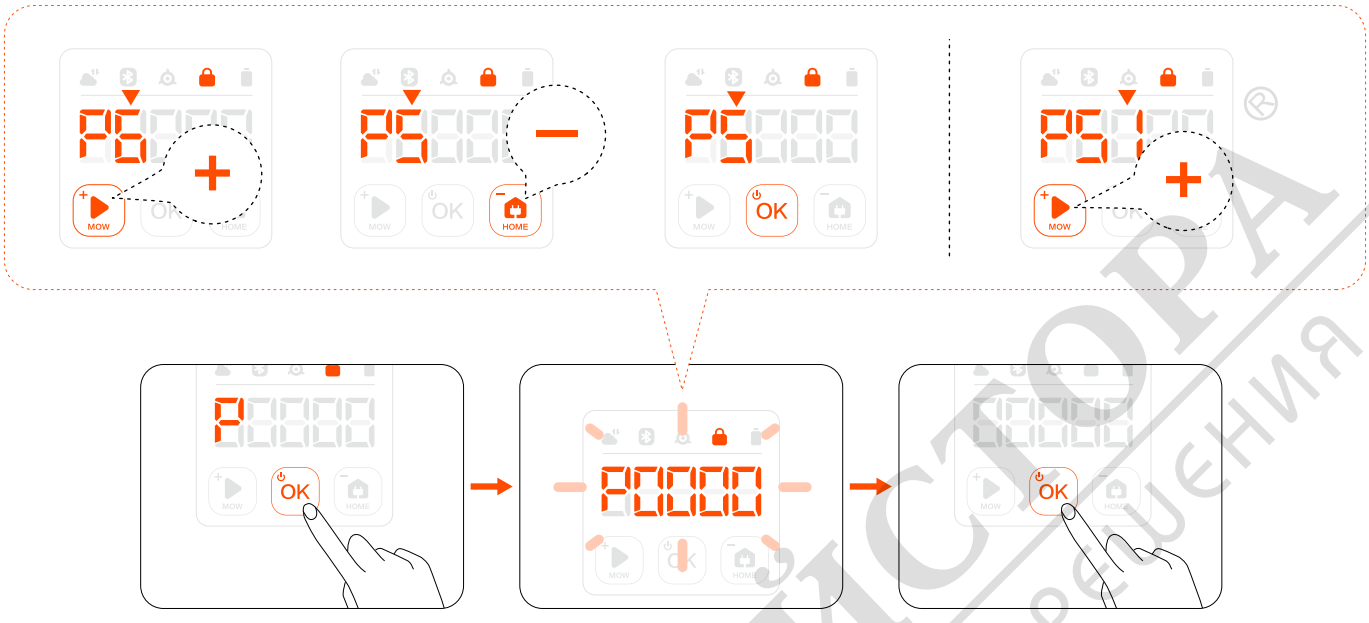

магазин БАШ МАЙСТОРА ПРОФЕСИОНАЛНИ РЕШЕНИЯ

2.3 Specifications

		i205 AWD	i206 AWD	i208 AWD	i210 AWD
Basic Information	Dimensions: Length × Width × Height	545 x 385 x 285 mm (21.4 x 15.1 x 11.2 in)			
	Net Weight (Battery Included)	12.05 kg		12.3 kg	
Mower Parameters	Recommended Mowing Area	500m²	600m²	800m²	1000m²
	Typical Mowing Time Per Full Charge[1]	About 60 min		About 120 min	
	Area Capacity per Hour	125 m²/h			
	Cutting Width	18 cm			
	Cutting Height	2-6 cm			
	Charging Time	About 60 min		About 120 min	
Noise Emissions[2]	Measured Sound Power Level LWA	59 dB(A)			
	Sound Power Uncertainties KWA	3 dB(A)			
	Sound Pressure Level LpA	51 dB(A)			
	Sound Pressure Uncertainties KpA	3 dB(A)			
Working Conditions	Working Temperature	0–40°C (32–104°F); 10–35°C (50–95°F) recommended			
	Storage Temperature	-20–50°C (-4–122°F); 10–35°C (50–95°F) recommended			
	IP Rating	IP66 for mower body and charging station, IP67 for power adapter			
	Max. Incline Inside Working Area	45%			
	Max. Incline at Boundary	45%			
Blade Motor	Rated Speed	2500/min			
Battery Pack	Battery Type	Lithium-ion battery			
	Nominal Voltage	21.6 V DC			
	Nominal Capacity/Energy	2.55 Ah / 55 Wh		5.1 Ah / 110 Wh	
Power Supply	Input Voltage	100–240 V AC			
	Output Voltage	32 V DC MAX			
	Output Current	2.5 A MAX			
	Cable Length	7 m			
Charging Station	Input Voltage	32 V DC			
	Input Current	2.5 A MAX			
	Output Voltage	25.2 V DC			
	Output Current	2.5 A MAX			
	Indicator	LED			

[1] Tested at a standard cutting speed with a full battery at an ambient temperature of 25°C (77°F) while mowing a fresh-cut lawn. The product can mow more per hour on open areas than on separated small lawns. When the grass is wet or long, the working capacity is smaller. The flatter the lawn surface, the larger the working capacity.
[2] The noise emission declarations conform to EN 50636-2-107.

МАГАЗИН БАШ МАЙСТОРА ПРОФЕСИОНАЛНИ РЕШЕНИЯ

2.4 Accessories (Sold Separately)

2.4.1 Navimow Garage S

Navimow Garage S is fully compatible with the Navimow i2 AWD, as it does not block GPS signals or network connectivity. The garage provides extra protection against sunshine and rain. The flip-up cover enables easy access to the control panel so you can operate the mower on the charging station.

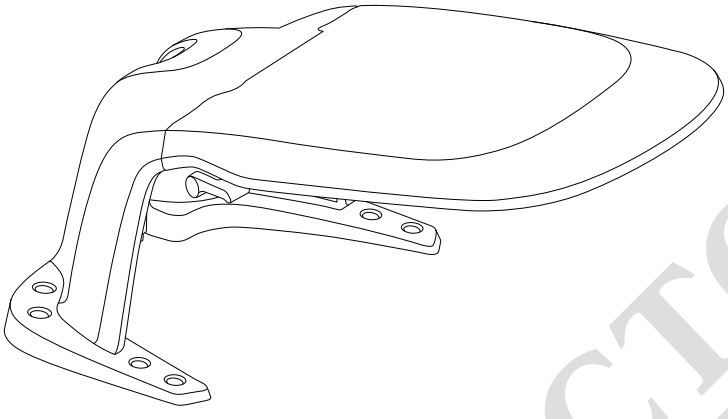

2.4.2 Other

The following accessories are also compatible with Navimow i2 AWD:

- Blade Assembly Plus
- Antenna Extension Cable
- Antenna Mounting Kit

магазин БАШ МАЙСТОРА® ПРОФЕСИОНАЛНИ РЕШЕНИЯ

3. Installation

3.1 Before You Start

Charge the mower for the first time

A new mower may have a low battery after a long-time storage. Fully charge the mower before the first use. Place the mower in the charging station. Make sure the charging port on the mower and the contact strip on the charging station are in good contact.

3.2 Activate the Mower

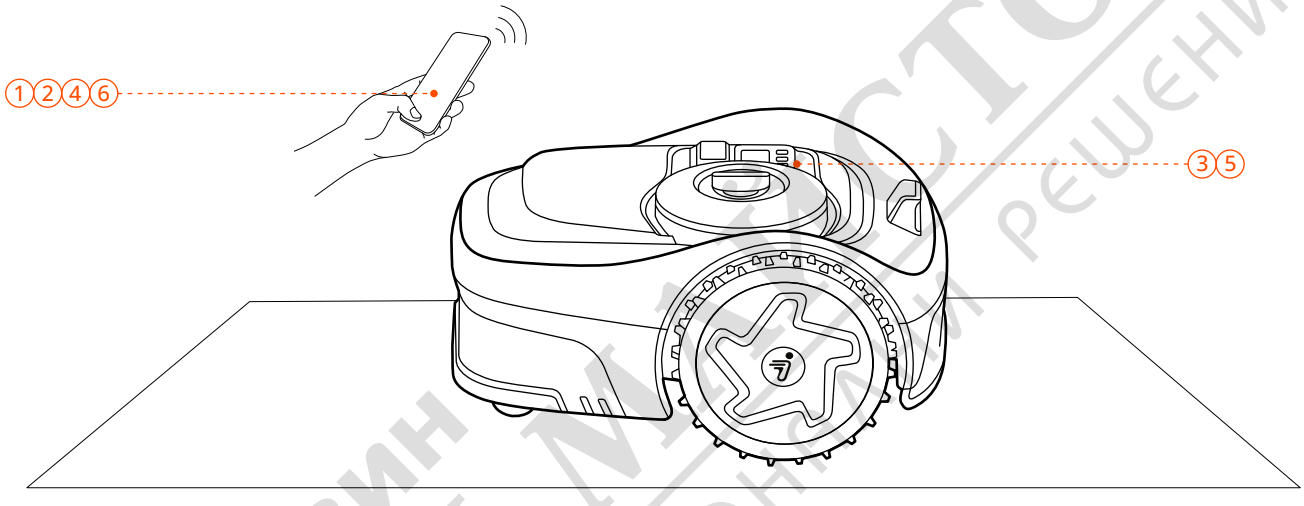

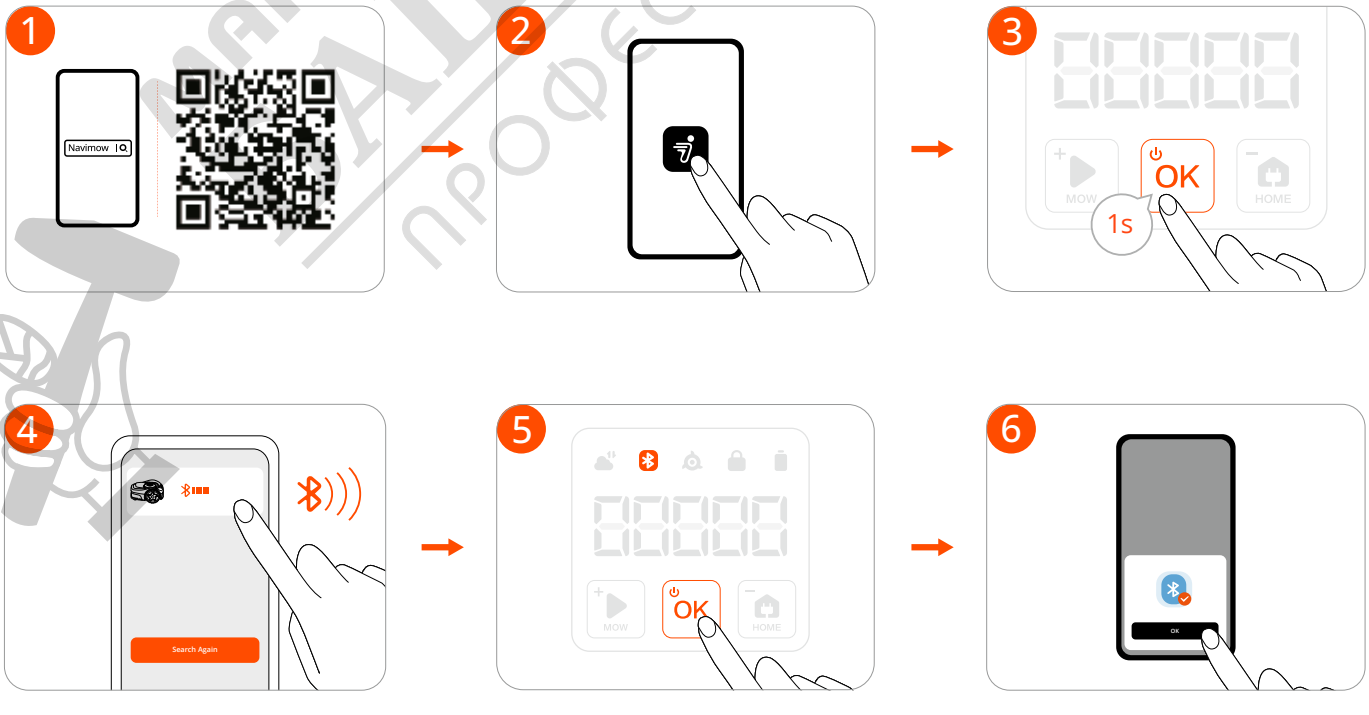

МАГАЗИН ВАШ МАЙСТОРА ПРОФЕСИОНАЛЬНИЙ РЕШЕНИЯ

3.3 Use Network RTK Service (Recommended)

The Network RTK is a positioning service based on network RTK technology that provides high-accuracy GPS correction data without an antenna installed in your yard.
By receiving real-time correction signals through the mobile network, the mower achieves precise positioning across areas within network coverage.

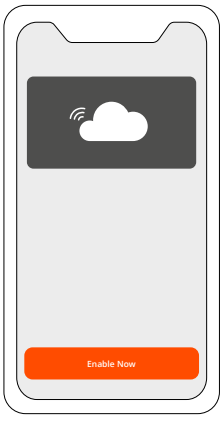

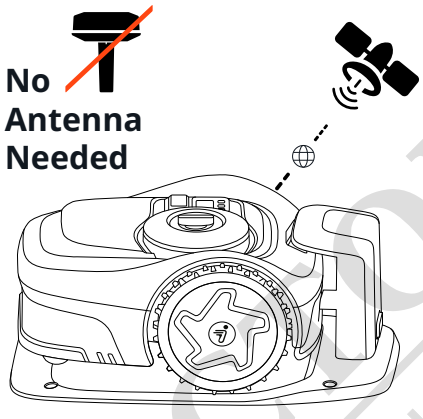

During initial activation of the mower:

- If the Network RTK service is supported in your area, the service is activated automatically and is free of charge. No additional setup or hardware installation is required.
- If the Network RTK service is not supported in your area, it will not be activated. However, this service may be supported later during usage. Once it is supported, go to Home > Settings > Advanced features > EFLS NRTK> Positioning mode and switch from Local RTK to Network RTK.

3.4 Install the Antenna (Optional)

If the Network RTK service is not supported in your area, install the antenna with the tools provided in mower box.
Choose an open area with no walls blocking views in any direction. Make sure the sky directly above the antenna is not obstructed by trees or roofs.
If you cannot find a proper place on the ground, use the Antenna Mounting Kit to mount the antenna on a wall or roof for complex yards.

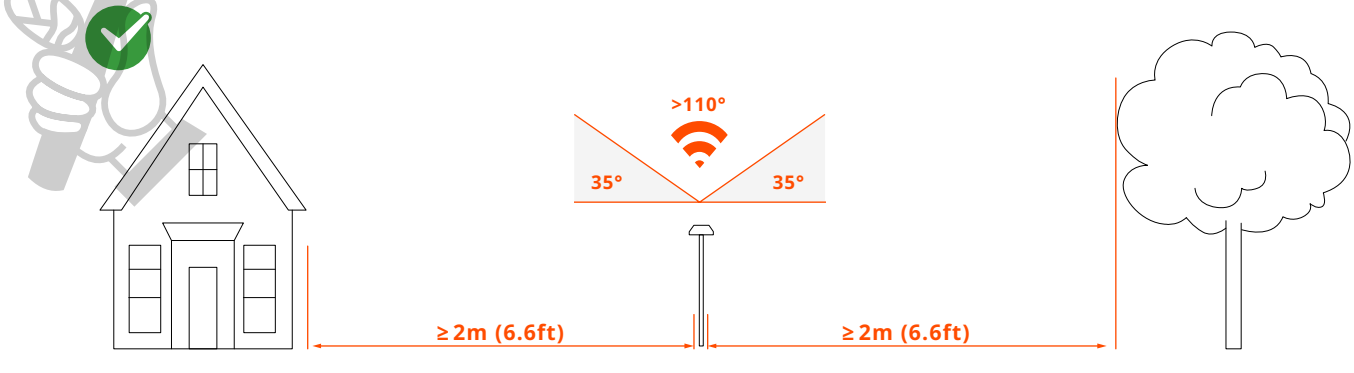

магазин БАШ МАЙСТОРА® професионални решения

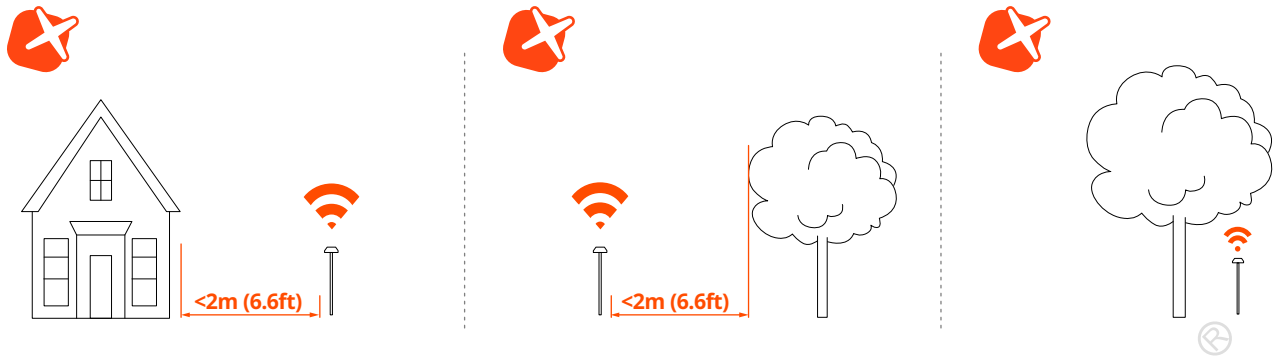

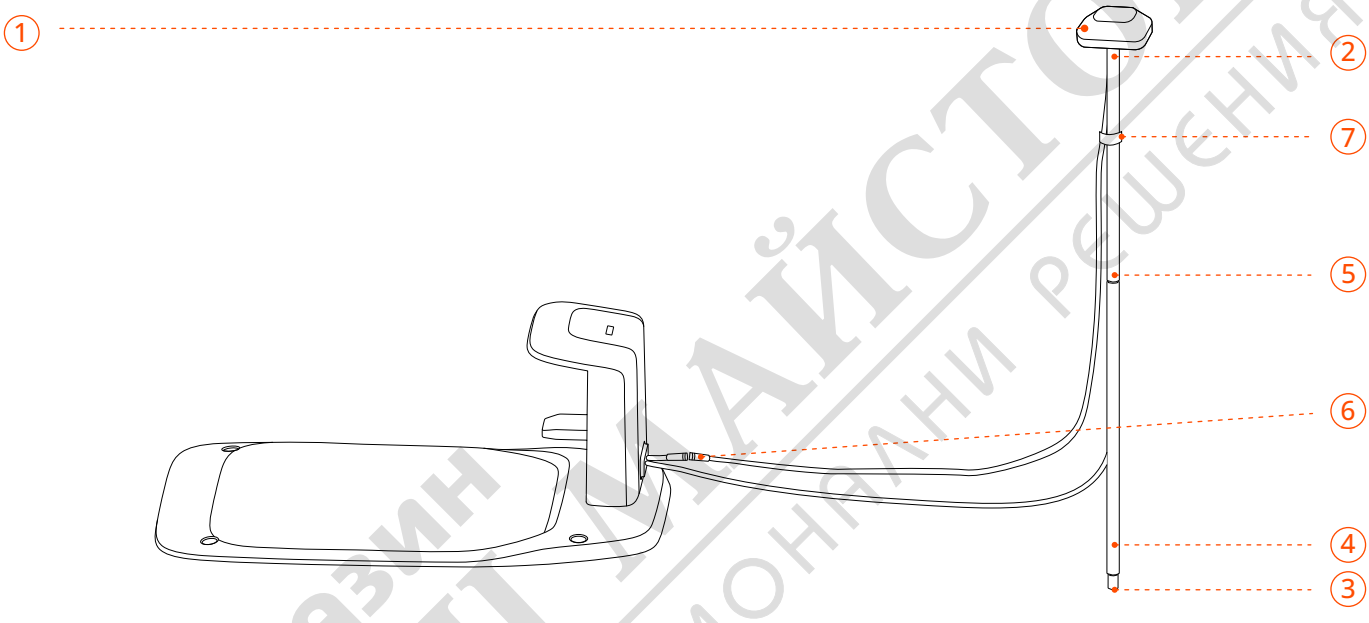

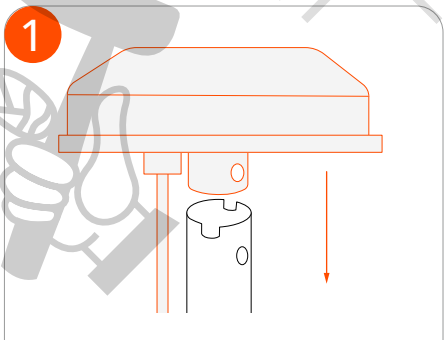

Attach the antenna head on the tube.

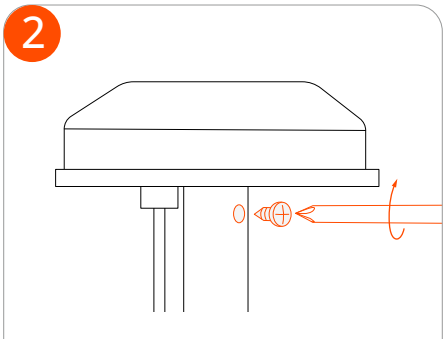

Use a screw to secure it.

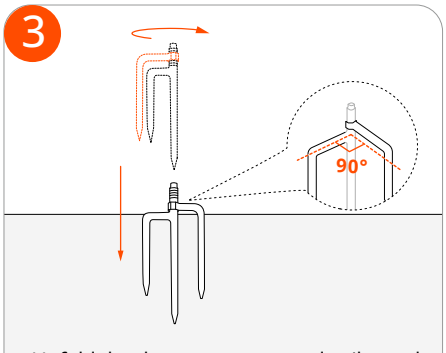

Unfold the three-prong ground spike and push it into the ground for anchoring.

магазин БАШ МАЙСТОРА ПРОФЕСИОНАЛНИ РЕШЕНИЯ

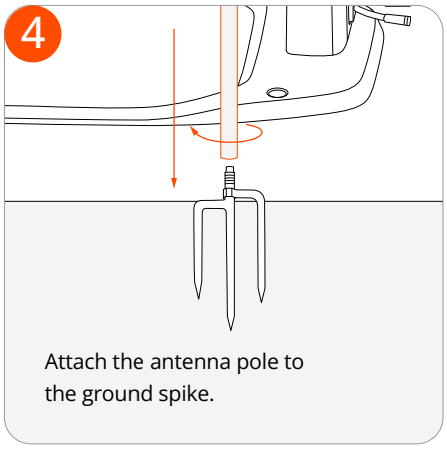

Attach the antenna pole to the ground spike.

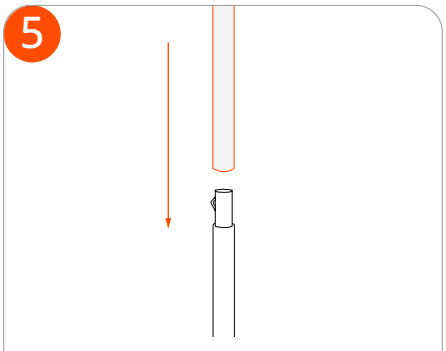

Attach the tube to the pole.

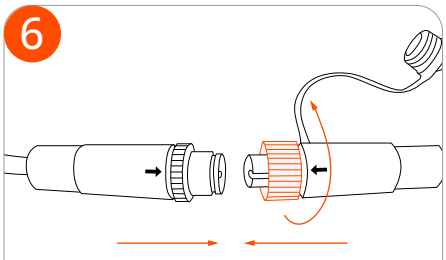

Connect the antenna cable to the charging station.

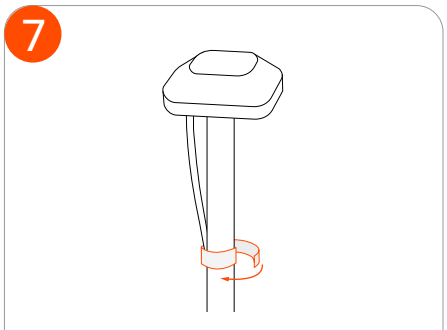

DO NOT put anything on the antenna.

3.5 Assemble the Charging Station

Install the charging station on a soft, flat surface. Install the charging station on soft, flat ground, level with the lawn. Choose an open area with no signal blockages within a 2 m (6.6 ft) radius. Keep the charging station away from sprinkler heads, fountains, substations, generators, and other sources of water or electromagnetic interference.

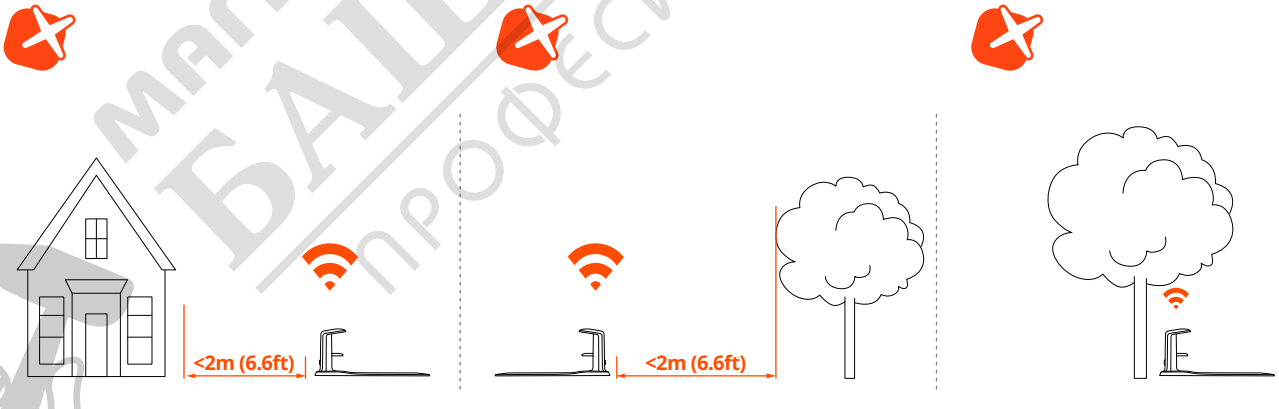

магазин БАШ МАЙСТОРА® професионални решения

Push the mower into the charging station, connect the cable, and plug it into an power outlet.

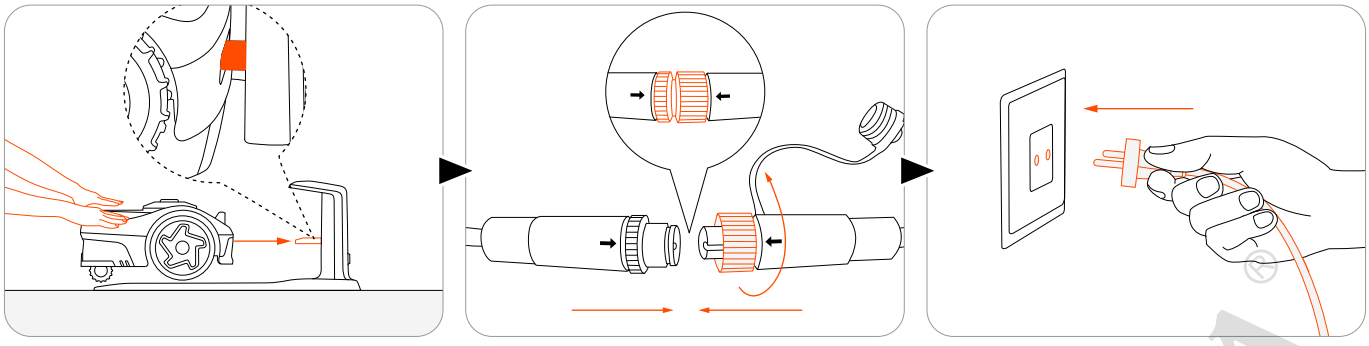

Wait until the light on the mower turns green.
If the red light shows, check if the charging station is properly plugged in.
If the light flashes yellow for over 5 minutes, relocate the charging station (for Network RTK users) or relocate both the antenna and the charging station (for antenna users).

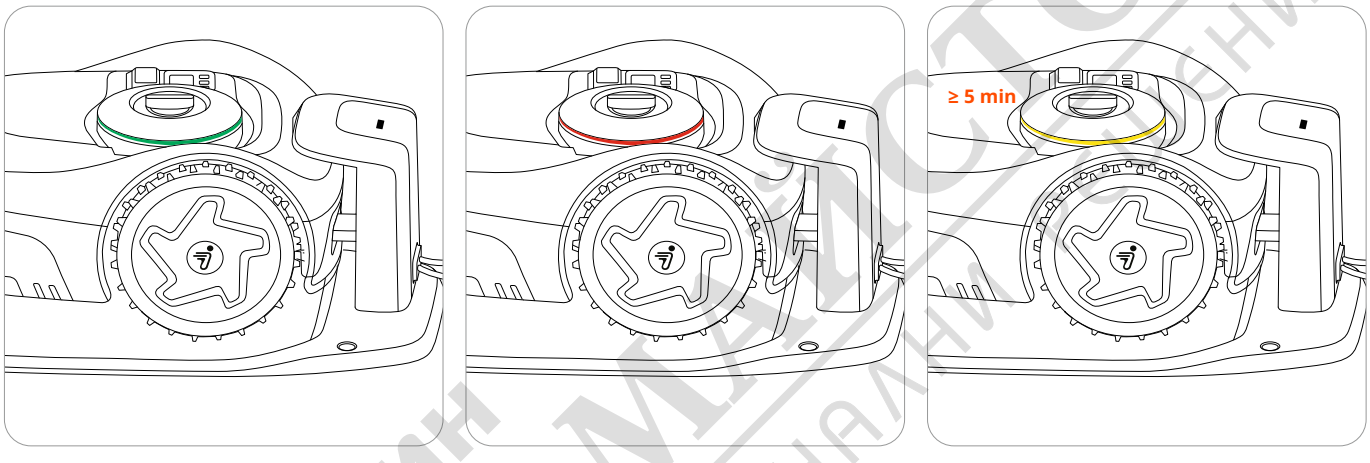

Finally, anchor the charging station to the ground. Use the pegs to pin the cable to the ground.

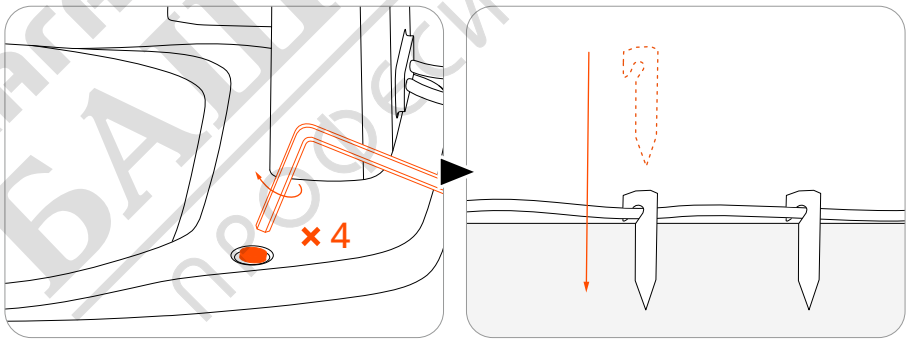

3.6 Update Navimow OS

Go to **Home** > **Settings** > **My devices** > **Software update**. Update the Navimow OS to the latest version. During this process, do not power off the mower or perform other operations.

магазин БАШ МАЙСТОРА профессиональные решения

4. Operation

4.1 Create Map

4.1.1 Preparations

Clear your lawn

Remove debris, piles of leaves, toys, wires, stones, and other obstacles from your lawn. Make sure children and pets are off the lawn. Cut weeds and overgrown grass, keep the grass at the height of 6 cm (2.4 in) or lower.

Get your mower ready

Make sure the mower is powered on and connected to your phone via Bluetooth.

NOTE: If the mower is in lock status, enter the PIN code to unlock it.

4.1.2 Auto Mapping

Mark the first mowing zone on your lawn

1. Remotely control your mower to the nearest lawn.
2. Tap 'Mark this zone' on the screen when the mower reaches the first lawn. Stay within 6 m (19.7 ft) from the mower when controlling the mower.

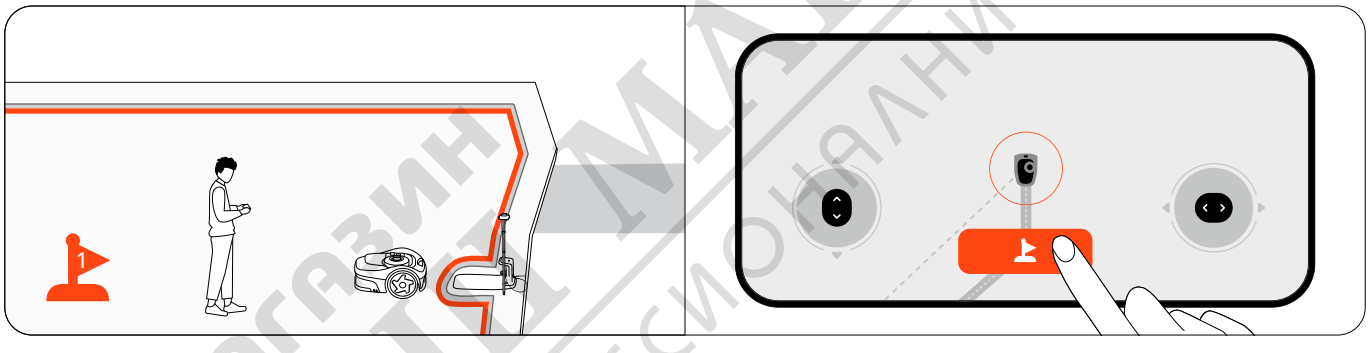

Mark other mowing zones on your lawn (if applicable)

1. Remotely control your mower to the next lawn zone.

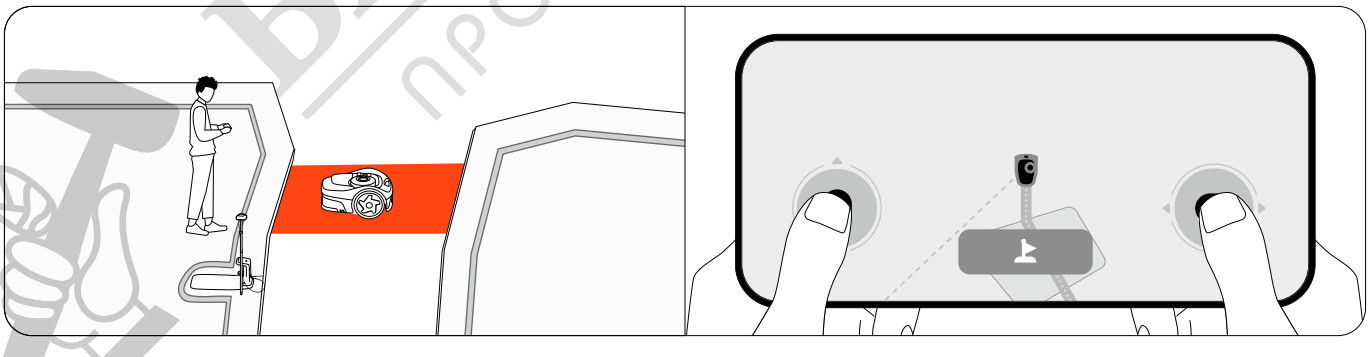

магазин БАЦ МАЙСТОРА професионални решения

2. Tap 'Mark this zone' on the screen when the mower reaches the lawn. By doing this, a channel between zones will be created automatically. Avoid detours or narrow, uneven paths with obstacles when driving the mower. Recommend to mark all zones in order for high mapping efficiency.

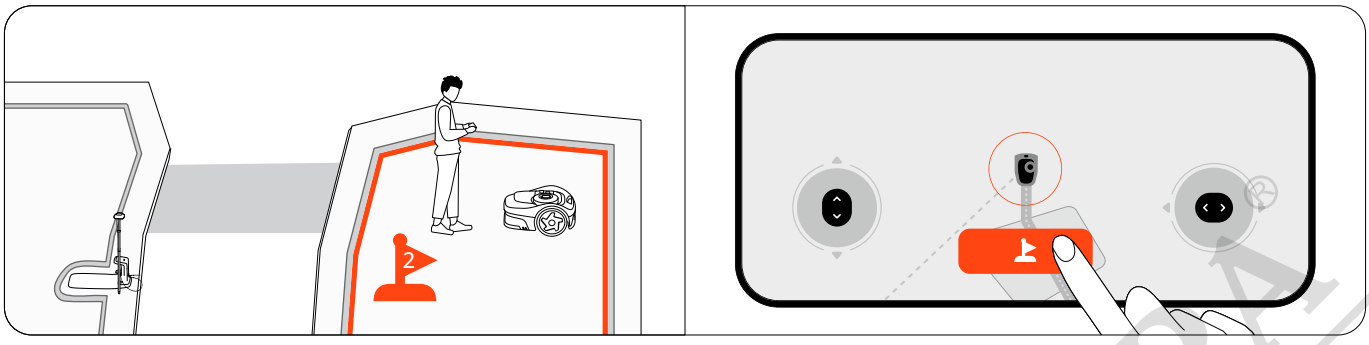

3. Repeat step 1 and 2 to mark more zones.
4. Tap 'Done' when you finish marking all zones.

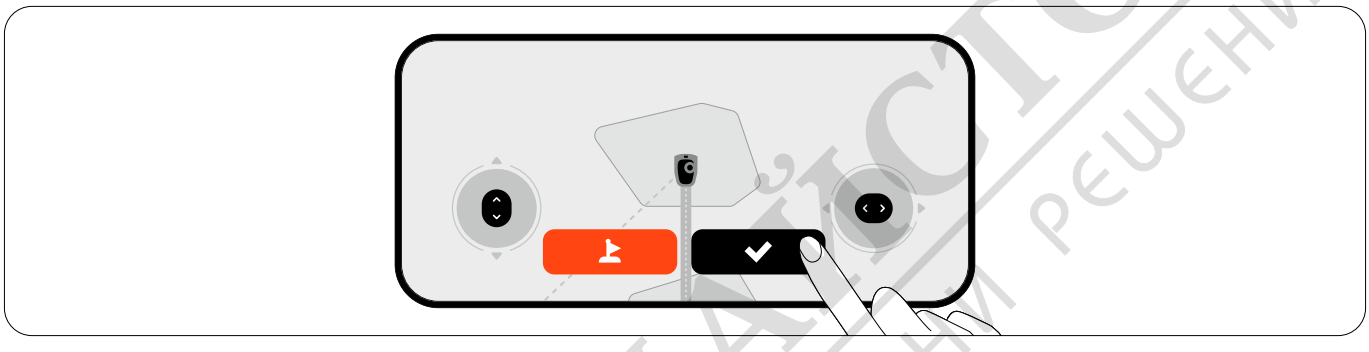

Auto mapping

The mower automatically maps all zones in reverse order from how they were marked. You don't need to keep the phone connected to the mower during this process, so feel free to leave it. Once the map is created, you will be notified, and the mower will automatically return to the charging station.

4.1.3 Manual Mapping

If you prefer to create a map under your control, guide the mower around the edge of a lawn to create its boundary.

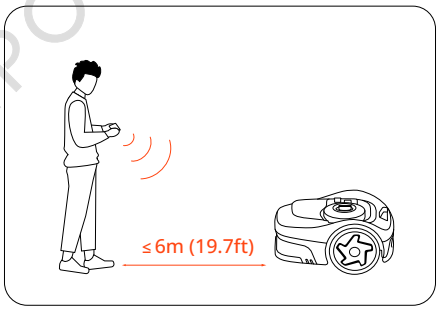

Find a starting point along the edge of your lawn. Walk behind the mower, stay within 6 m (19.7 ft) from the mower.

МАГАЗИН БАШ МАЙСТОРА ПРОФЕСИОНАЛНИ РЕШЕНИЯ

NOTE: Follow a straight line with a smooth turning angle of no less than 90°.

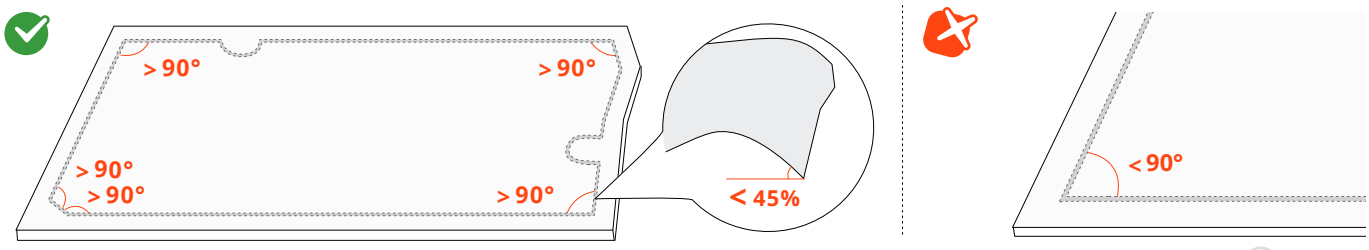

4.1.4 Map Elements

Add map elements to your map via **Home** > **Settings** > **Map management**.

Icon	Map elements
	Boundary
	Off-limit Island (BioLife Island)
	Channel
	VisionFence-off Zone
	Doodle

Boundary

A boundary is a virtual line that defines the edge of a mowing zone. You can create up to 20 mowing zones. A zone is automatically created after the boundaries of a work area is mapped out. You can continue to create more zones and connect them with channels.

Isolated Zone

If a lawn is not connected to any other lawns, and the mower cannot reach there on its own, this lawn is created as an isolated zone. To mow in an isolated zone, carry the mower there, press the MOW button on the mower. To recharge after mowing, carry the mower back to the charging station.

NOTE: Only one-time mowing tasks are supported in isolated zones.

магазин БАШ МАЙСТОРА професионални решения

Off-limit Island (BioLife Island)

The off-limit island is an area you want the mower to avoid while mowing, such as flowerbeds, ponds, or sprinkler heads. For objects temporarily placed in the mowing zones, like trampolines or grills, you can set their location as an off-limit island and delete it once the objects are cleared from the lawn. Off-limit islands are also called BioLife islands. Create BioLife islands where grass and plants can grow naturally for bees, butterflies, and hedgehogs.

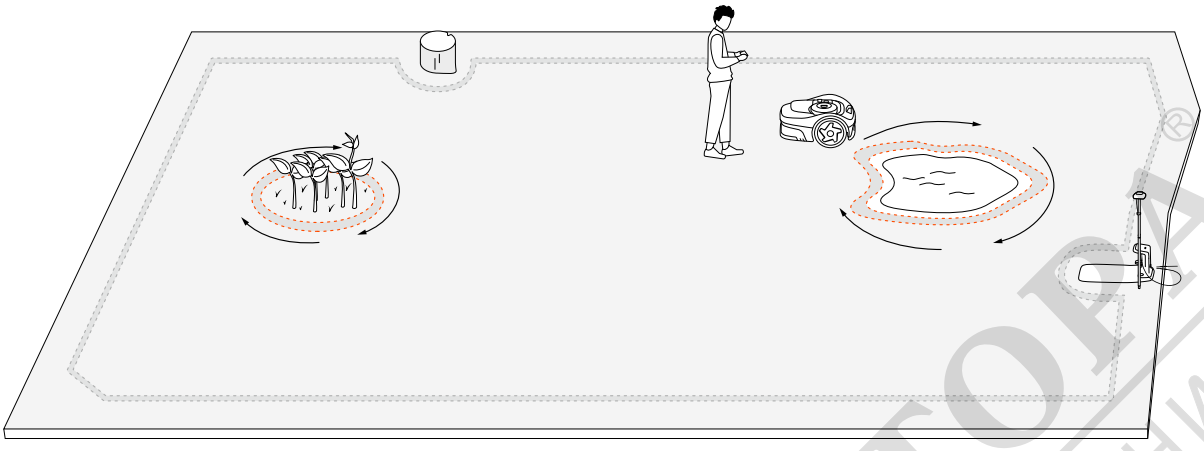

Channel

Channels are pathways connecting two separate mowing zones or connecting the edge of a lawn to the charging station. For auto mapping, channels are automatically created when you guide the mower to go from one zone to another.

NOTE: The channel should be wider than 1 m (3.3 ft).

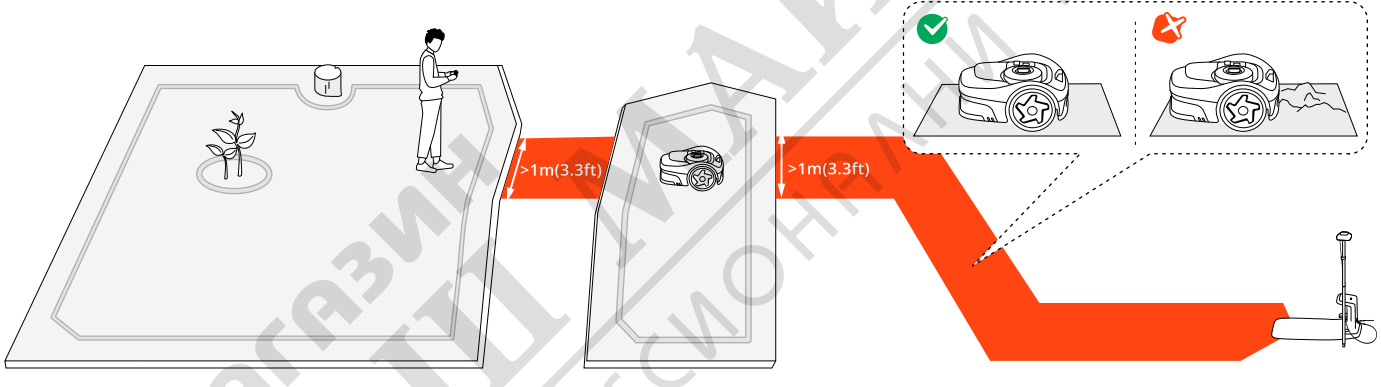

VisionFence-off Zone

A VisionFence-off zone is a place where the mower automatically turns off the camera sensor used for obstacle avoidance. The mower will directly pass through instead of turning away. Set up a VisionFence-off zone for places such as stone roads or utility holes, where you need to the mower the pass through for a thorough cut. You can adjust the size of a VisionFence-off zone, move it to another place, or delete it.

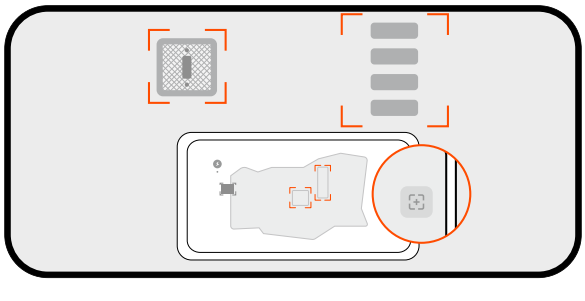

магазин БАШ МАЙСТОР професионални решения

Doodle

A doodle is a fun design or pattern that you can create on your lawn using your mower. By choosing a design (a logo or a combination of letters and numbers) and a location, the mower will leave that part of the lawn uncut. Once the rest of the lawn is mowed, the doodle will show. You can decide how many active days the doodle will last. After that, the mower will mows over it completely.

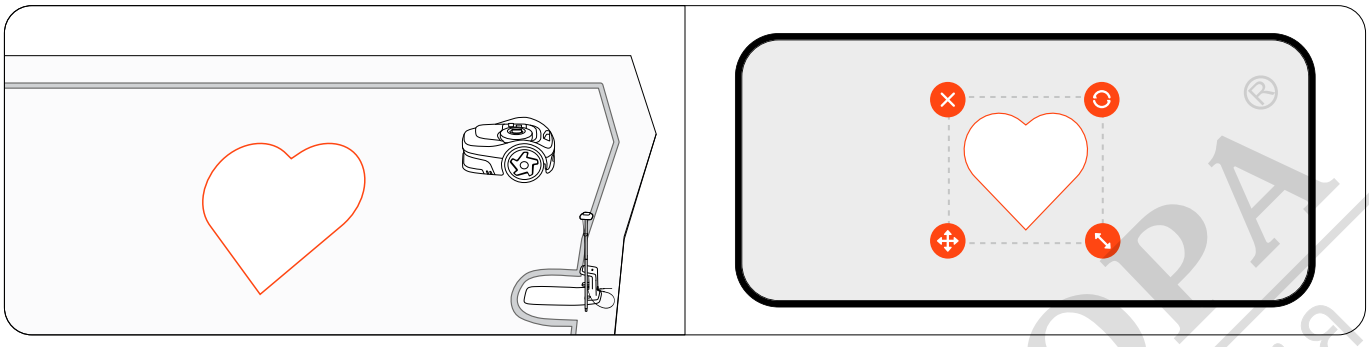

4.2 Mow

4.2.1 How Does Navimow Mow

Mowing along the boundary and around off-limit islands

Your mower mows along the boundary when it starts a mowing task, and mows around the off-limit islands when it mows inside the lawn. If the surroundings are complex, to avoid risks, you can disable 'Edge Mowing' from **Map management** > **Edit** > **Edge Mowing** for each zone.

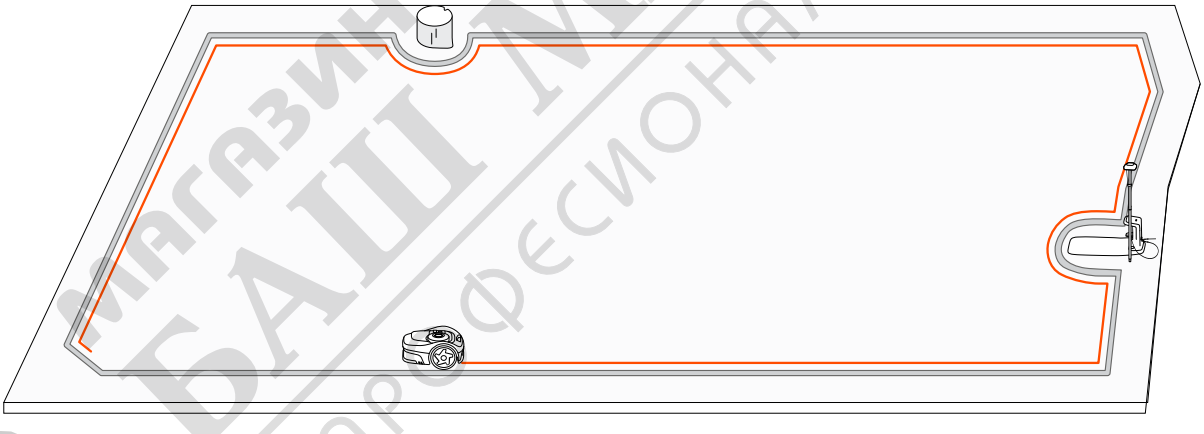

Магазин БАШ МАЙСТОРА професионални решения

Mowing with systematic patterns

Within the work area, the mower cuts the lawn using a smart, efficient path. When mowing in longer straight lines and fewer turns, it completes mowing faster and more smoothly. To avoid visible patterns, the mower changes direction at the start of each mowing task, ensuring a more uniform lawn appearance over time. When the mower cuts through tall and thick grass, it automatically slows down for optimal mowing results.

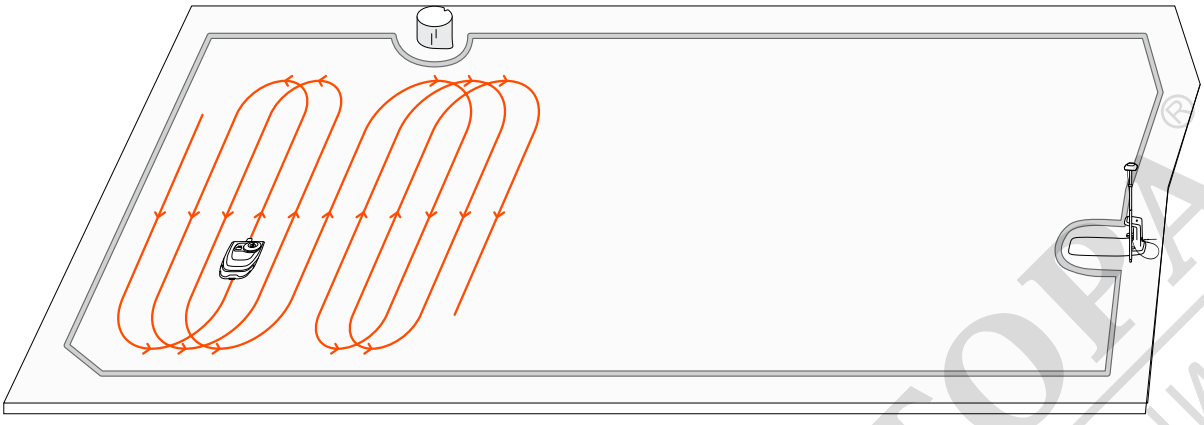

4.2.2 Manage Multiple Zones

You can create multiple zones for your map, each zone with its own unique name and a customized mowing direction, and mowing schedule.

Rename the zones

1. Tap to select a zone.
2. Tap 'Edit' and customize settings for the selected zone.

Tap the 'Rename' icon to set a name for the zone.

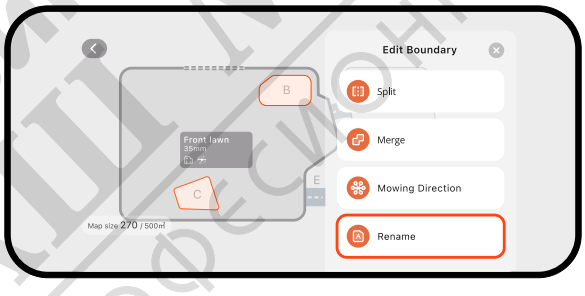

Customize mowing directions

The mower can automatically change its mowing direction according to your choices from **Map management** > **Edit** > **Mowing direction**. You can choose one or more directions so that mower changes the mowing direction every time it finishes a round of mowing.

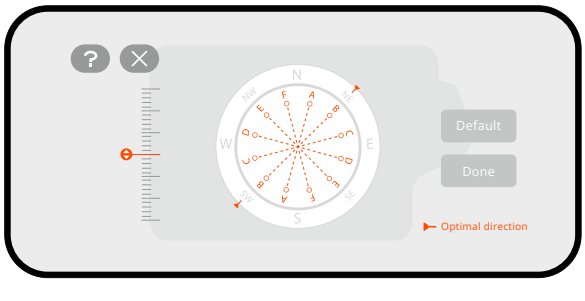

МАГАЗИН БАШ МАЙСТОРА ПРОФЕСИОНАЛНИ РЕШЕНИЯ

Create or modify mowing schedules

1. Go to **Home** > **Settings** > **Mowing schedule**.
2. Select a day to set up a schedule.
3. Set the start time and end time of the schedule.
4. Select which zone(s) to apply the schedule.
5. Tap 'Confirm' to save the settings.

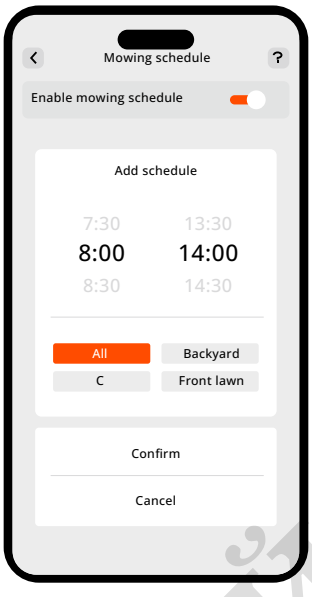

Enable or disable mowing schedules

You can disable mowing schedules if you don't want the mower to follow them.

Split and merge zones

To split a zone into smaller ones, manually control the mower to cut a zone into two. Go to the 'Map management' page, select a zone, and find 'Split' in 'Edit'. The new zones will follow the same settings as the old one.

To merge several zones into one, go to the 'Map management' page, select a zone, find 'Merge' in 'Edit', choose an adjacent zone, and merge them. You can only merge two zones at a time. The new zone will follow default settings, and you can customize them if needed.

магазин БАШ МАЙСТОРА професионални решения

4.3 Basic Functions

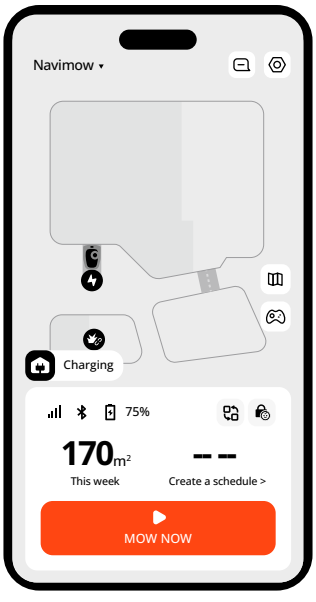

4.3.1 App Home Screen

The home screen is where you can view the status of the mower, check work progress, start or stop mowing, and send the mower home.

Icon	Description
Navimow ▾	Switch to another mower of yours
	View notifications and mower-related settings
	Map management
	Manually control the mower to mow
	Bluetooth connectivity. When disconnected, tap to reconnect
75%	Battery level and charging status
	Switch to specific scenarios: Quickly apply specific settings to your mower for Holiday mode and Sleep mode
	Child lock disabled/enabled (shown by default)
	Safety lock disabled/enabled (shown after you lock the mower via mower buttons)

4.3.2 Navimow Store

You can browse the Navimow Store and purchase official accessories, join Navimow Circle and earn points for discounts.

магазин БАЙМАЙСТОРА профессионални решения

4.3.3 Mine

From the Mine tab, you can change account settings, and general settings (language, units, and more), contact customer support for help, and find instruction guides.

4.3.4 Other Device Settings

Network Settings
Check the current connection and choose how the mower connects to a network: only through Wi-Fi, only through 4G, or let the system switch between Wi-Fi and 4G based on connection quality.

Customization
Light: Adjust the brightness level of the mower when it works during the night.
Sound: Choose to let the mower speak in human voice or play sound effects.
Language: Choose your preferred language for the mower screen and the voice feedback.
Eco mode: To save energy, the display screen will turn off after 10 seconds of Bluetooth disconnection, and the mower's ambient lights will be turned off.

Device information
Rename: Give your mower a unique name.
Basic info: Check for the mower model, its serial number, activation date, expiration date for 4G service, warranty status, and maximum mowing capacity.
NOTE: You can buy and activate your Extended Warranty directly via **Home** > **Settings** > **My devices** > **Device information** > **Basic info**.
Time zone and country: Set your time zone and country/region to ensure mowing schedules can follow local time. If your region observes Daylight Saving Time, enable DST so the mower can adjust the time automatically.

Device management
Device sharing: Share your mower with other registered Navimow app users. Shared users have full access to manage the mower. Sharing can be canceled by either party at any time.
Switch/Add device: Add multiple mowers and switch between them.
Unbind device: After unbinding, you can choose to keep or delete your user data.

4.4 Safety Features

4.4.1 Anti-theft

The Anti-theft feature can precisely locate your mower and prevent incidents such as mower theft. You can choose to enable the alarm when the mower is being lifted and when the mower crosses over the virtual boundary.
NOTE:
1. It can only be used under a 4G network. Make sure your 4G service has not expired.
2. If the Anti-theft feature is enabled, you need to enter PIN code on the mower before powering it off.

Mower-lifted alarm
This alarm alerts you if your mower is being lifted off the ground for a few seconds. When enabled, you will hear an alarm and receive a notification on your app. To stop the alarm, enter the PIN code directly on the mower. If you need to carry the mower to a different location, it is recommended to connect your phone via Bluetooth beforehand to prevent false alarms.

магазин БАШ МАЙСТОРА® професионални решения

Geo-fence alarm

This alarm alerts you if your mower crosses a designated boundary. When enabled, you will hear an alarm and receive a notification on your app. To stop the alarm, enter the PIN code directly on the mower.

When the geo-fence alarm is enabled, you can adjust the geo-fence radius and check Navimow's location on the map in real-time. If the mower runs out of battery and powers off on the way back to the charging station, you can find where it stopped via the app.

4.4.2 Device Lock

The safety lock and child lock are used to ensure the safety of the mower and prevent unintended operations. To enable them, go to **Home** > **Settings** > **Safety features** > **Device lock**.

Safety lock

The safety lock prevents accidental activation of the mower when it needs to be carried or cleaned. Press MOW+HOME for more than 3 seconds to lock the mower. When locked, the mower remains inoperable until you unlocks it with the PIN code.

Child lock

The child lock prevents children or pets from accidentally operating the mower by touching the buttons while it is working or on standby. By enabling it, the buttons on the mower won't respond to pressing or touching. You can still operate your mower via the app.

4.5 Advanced Features

4.5.1 EFLS NRTK

Positioning mode

You can switch between the Network RTK mode and the Local RTK mode as your positioning data source from **Home** > **Settings** > **Advanced features** > **EFLS NRTK** > **Positioning mode**.

If the Network RTK is supported in your area after the initial setup, activate the service first, and then switch to it.

Camera-assisted positioning

The Camera-assisted Positioning feature uses the EFLS (Exact Fusion Locating System) technology to improve positioning accuracy. This means the camera is used to collect visual elements that compensates the loss of GPS signal in certain areas. This improves map quality and avoids leaving grass uncut or the mower going out of boundaries. After this feature is enabled, the improvement starts automatically once the mower returns to the charging station.

The result can be one of the following:

- Map accuracy improved: The boundaries, off-limit islands, and channels are all now updated with more accurate positioning.
- Map accuracy failed to be improved: The map has large areas with very poor GPS signal.

4.5.2 Weather Adaptive

The mower can react to real-time weather info and adapt its mowing schedules, either stopping the current task or delaying the upcoming tasks. You can set how you want the mower to react under these weather conditions: rain, snow, hot weather, frost, and strong wind. To ensure a healthy lawn and a longer work life of your mower, go to **Home** > **Settings** > **Advanced features** > **Weather adaptive** to customize settings for each type of weather.

Магазин БАШ МАЙСТОРА ПРОФЕСИОНАЛНИ РЕШЕНИЯ

4.5.3 VisionFence

Avoid obstacles in channels

You can enable the Channel Obstacle Avoidance switch and the mower can "see" the surroundings and intelligently passes through by actively avoiding obstacles or other objects that are distinct from the ground. Even when the GPS signal is poor around the channel, the mower can still manage to pass through with visual detection.

Animal friendly

You can enable 'Animal friendly' mode so the mower will stay far away from pets and small animals in its vicinity by adjusting its path in real-time. Go to **Home** > **Settings** > **Advanced features** > **VisionFence** > **Animal friendly**. This avoids accidental harm to wildlife such as hedgehogs, and reduces the chance of alarming or disturbing nearby pets.

4.5.4 Smart Home

Use voice commands to control your mower with third-party smart devices: Amazon Alexa, Google Assistant, Hornbach. Go to **Home** > **Settings** > **Advanced features** > **Smart Home** and follow the instructions of adding Navimow to a smart home device.

4.5.5 Traction Control System (TCS)

The Traction Control System feature improves the mower's stability and mobility, so the mower can tackle wet, muddy, and other complex terrains with ease. This also reduces chances of mower getting stuck and avoids damages to your lawn. Enable it from **Home** > **Settings** > **Traction Control System** for a smoother mowing experience.

магазин БАШ МАЙСТОРА® ПРОФЕСИОНАЛНИ РЕШЕНИЯ

5. Maintenance

Keep the mower clean and the blades in good condition for better performance and longer service life. Inspect and maintain it regularly, and replace any damaged or worn parts.
Check the used hours and remaining working hours of mower parts from **Home** > **Settings** > **Maintenance & Tools** > **Parts maintenance**.

5.1 Cleaning

⚠ **WARNING**

- Before cleaning or turning the mower upside down, power off the mower.
- DO NOT perform maintenance in sandals or barefoot. Always wear long trousers and work shoes.

Mower's exterior

Use a soft brush or cloth to clean the mower's exterior. Do NOT use alcohol, gasoline, acetone, or other corrosive or volatile solvents, as they may damage the surface and internal structure of the your mower.

Camera lens

If the camera lens is stained, use a piece of clean cloth and gently wipe off dirt or stains.

Charging port

Check the charging port for dirt or grass. Clean it in time to avoid charging issues.

Chassis and cutting disc

Use a brush or a water hose to clean the dirty parts.
NOTE: DO NOT use a high-pressure washer. High-pressure water can leak into the sealings and damage electronic and mechanical parts.
Also, make sure that the cutting disc rotates freely and the blades can spin freely.

Wheels

If they get stuck with grass and debris, rinse with a water hose.

Charging station

Remove debris and mud, and make sure the contact strip, the power cable and its extension cable are not damaged.

5.2 Replace Blades

For regular use, replace all blades and their screws every 1–2 months to ensure safe and effective cutting.
NOTES:
1. DO NOT reuse old screws. Always use original Navimow blades and the correct screws (Blade model: X3A06E).
2. DO NOT use an electrical screwdriver to loosen or install the cutting disc.

магазин БАШ МАЙСТОРА® професионални решения

To replace the blades:

1. Power off the mower and wear protective gloves
2. To avoid scratching, place the mower upside-down on a flat and clean surface.
3. Use a cross-tip screwdriver to loosen the screws.
4. Remove the cutting disc, the screws, and the blades.
5. Fasten the cutting disc and the new blades with the new screws (Torque: 1 N·m). Make sure the blades can spin freely.

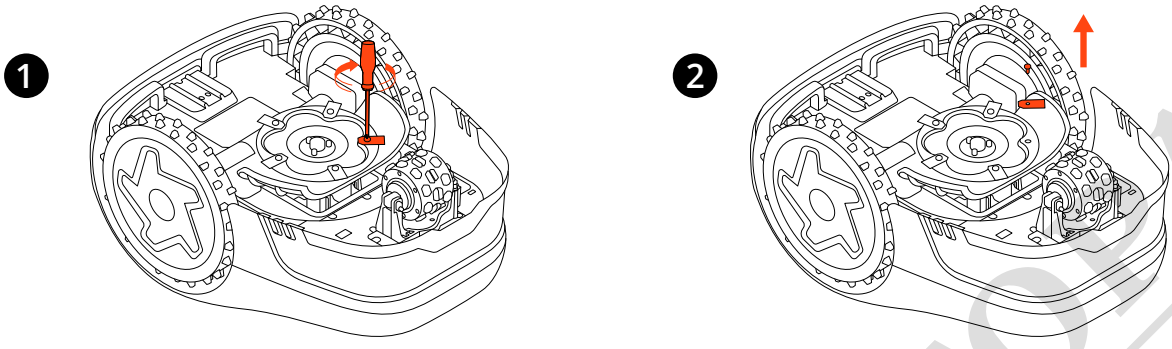

After fastening the blades and screws, the blades will still seem loose. This is normal as the blades need to spin during mowing.

5.3 Transportation

For long-distance shipping or transportation, use the original packaging to protect your mower. Always power off the mower before transporting it. Handle it gently and avoid impacts or heavy pressure. DO NOT carry the mower while it is working.

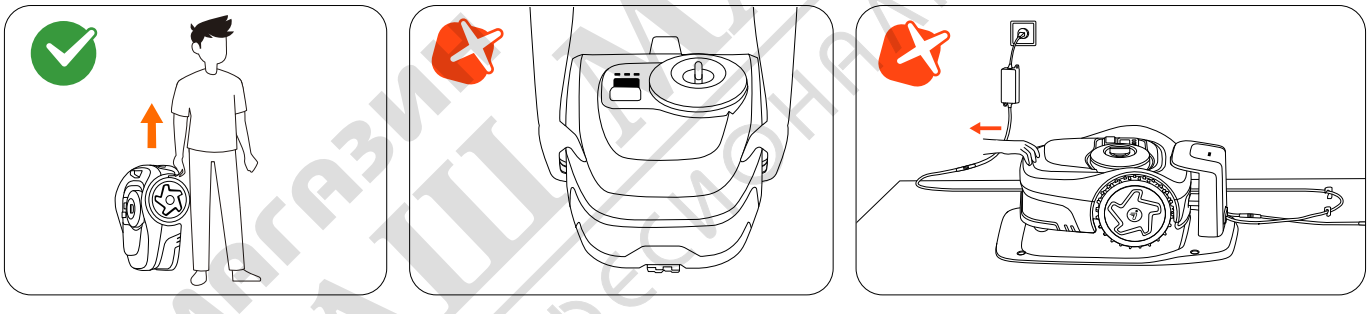

Carry the mower by the handle, with the cutting disc facing away from your body.

CAUTION: DO NOT lift the mower by the handle while it is still parked in the charging station. Always pull the mower off the station before lifting.

5.4 Battery and Power Supply

Battery Temperature Limits

DO NOT use or store the battery at extreme temperatures: above 50°C (122°F) or below –20°C (–4°F). Battery temperature protection activates when it is below 0°C (32°F) or above 53°C (127°F). The mower will not start mowing. Charging will resume only when the battery temperature returns to the safe range: 3°C (37°F) or higher, or 49°C (120°F) or lower.

Магазин БАШМАЙСТОРА® профессионални решения

Battery Life

Battery damage caused by overdischarge is not covered by the Limited Warranty.

Battery life depends on usage frequency and total operating hours. If the operating time per full charge becomes significantly shorter than usual or mowing performance declines, contact the after-sales service for battery replacement.

Safety Usage for Power Supply

Connect the mower and/or its peripherals only to a power supply circuit protected by a Residual Current Device (RCD) with a rated tripping current of 30 mA or less.

Always disconnect the power supply and power off the mower before:

- Clearing blockages around the power cable
- Cleaning or performing any maintenance on the mower
- Checking for damage after the mower hits an obstacle

Use the power supply only with the original Navimow-approved battery. Using non-original batteries may result in fire, electric shock, or personal injury. Do not charge the mower if the battery is leaking.

Regular Inspection

Regularly inspect the power cable, plug, enclosure, extension cable, and all related components. If any damage, wear, or signs of aging are found, stop using the power supply immediately.

⚠ WARNING

- DO NOT operate the mower with a damaged power cable. If the cable is damaged, have it replaced by the manufacturer, an authorized service agent, or qualified personnel.
- Replace any defective extension cable only with Navimow-approved cables.
- Keep all extension cables away from moving or hazardous parts to prevent damage and potential exposure to live conductors.
- DO NOT connect or touch damaged cords or extension cables before unplugging them. Damaged parts may expose electrical components and cause electric shock.

Replace Battery

NOTE: Use the battery model which matches the original battery capacity. Power off the mower before replacing the battery.

To remove the old battery, loosen the screws and unplug the cords.

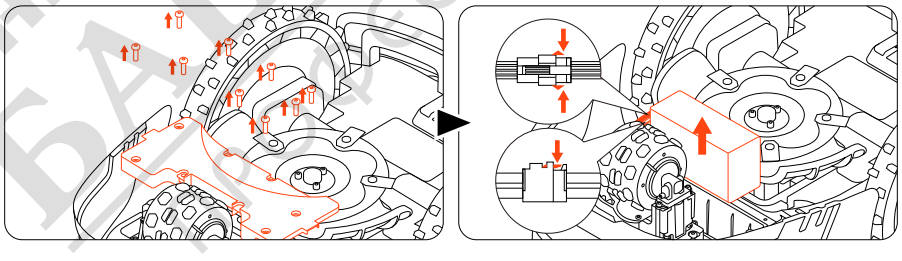

To install the new battery, connect the cords and put the battery inside its slot.

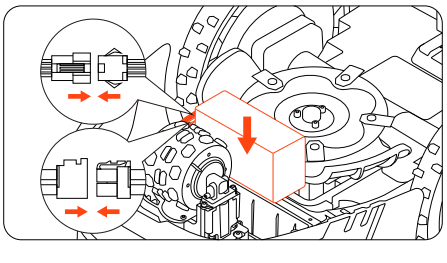

NOTE: Make sure the cords are tightly connected.

магазин БАШ МАЙСТОРА ПРОФЕСИОНАЛНИ РЕШЕНИЯ

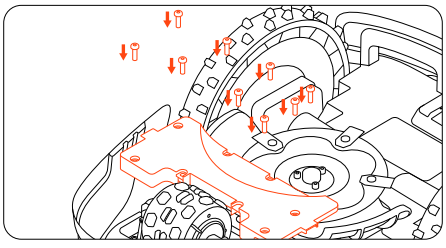

NOTE: Install all the screws back and secure them tightly.

5.5 Storage and Restorage

For optimal performance and service life, store your mower during the winter or during extended periods of non-use.

Storage Conditions

- Store the mower indoors in a cool, dry place. Avoid direct sunlight and extreme temperatures.
- Keep the mower, charging station, and power supply away from heat sources (such as stoves or radiators) and chemicals or corrosive substances.
- Protect the power supply from moisture and place it in a well-ventilated area.

Winter Storage

Follow the instructions below to store your mower before winter.

1. Uninstall the Navimow Garage (if already installed) from the charging station and put it away.
2. Charge the mower to at least 85% of battery, and put it in hibernation. Go to **Mine** > **Help and feedback** > **Winter storage** > **Hibernate your mower**.
3. Unplug the charging station, and unscrew the ground screws. Mark its location.
4. (If already installed) Cover up the antenna if it is installed on a wall or roof. Remove the antenna head if it is installed on the ground.
5. Remove the blades and clean the mower thoroughly. Refer to 5.1 Cleaning and 5.2 Replace Blades.
6. Pack the mower, the charging station, and all the cables into the box. Store them indoors.

Spring Restorage

Follow the instructions below to restore your mower in spring.

1. Remove all coverings from the mower.
2. Ensure that the charging station is clean and free from dirt.
3. Reconnect the cables that were disconnected during the winter. Check the cables for any damage or breaks and repair as needed.

NOTE: Check the blades for sharpness and replace them if necessary. check and clean the camera lens to ensure proper functionality.

4. Finally, power on the mower and test if the mower is bound to the app and works properly.
5. Reinstall the charging station. If it is placed differently from the previous year, update its location from **Home** > **Settings** > **Relocate charging station**.

магазин БАШ МАЙСТОРА® професионални решения

6. Warranty and Compliance

6.1 Sensors and Interfaces

The mower is equipped with external sensors that ensure accurate operation, navigation, and safety. All data collected by these sensors is used strictly for operational purposes and is not shared with third parties.

RTK (Real-Time Kinematic) module
Used for precise positioning of the mower. GPS location data is only collected when the Anti-theft feature is enabled. No location data is transmitted or stored during other operation.

Front-facing camera sensor
Used for obstacle detection and positioning. The camera sensor does not record or store video, and it is solely used in real-time to the mower's navigation system.

Lift sensor
Used to detect if the mower is lifted off the ground and immediately stops rotating the blades to prevent injury. This sensor does not collect or store any user data.

IMU (Inertial Measurement Unit)
Used to determine the mower's orientation and motion for accurate navigation. It functions internally and does not access or transmit any personal or location data.

The following network interfaces and services of the device are enabled by default:
- Bluetooth interface and customized Bluetooth service, used for network configuration and equipment control via the App.
- Wi-Fi interface, used for equipment network connection.
- RTK interface, used for equipment positioning.

магазин БАШ МАЙСТОРА® професионални решения

6.2 EC DECLARATION OF CONFORMITY

EC Declaration of Conformity for Robotic Lawn Mower
Manufacturer
Name: Willand (Beijing) Technology Co., LTD.
Address: Room 203, A-1 Bldg. Zhongguancun Dongsheng Technology Park (Northern Territory), No. 66, Xixiaokou Rd, Haidian Dist., Beijing, China.
Email: support-navimow@rlm.segway.com
Authorized Representative
Name: AR Experts B.V.
Address: Boeingavenue 209, 1119 PD Schiphol-Rijk, The Netherlands
Email: info@certification-experts.com
Object of the declaration
Generic designation: Robotic lawn mower
Product name: Navimow i2 AWD
Type/model: Mi2705E/Mi2706E/Mi2708E/Mi2710E
Serial number: 2SG xx yyyy x yyyy/2SA xx yyyy x yyyy/2SC xx yyyy x yyyy/2SF xx yyyy x yyyy ("x" indicates any letter from A-Z except O and I, "y" indicates any letter from A-Z except O and I or any number from 0-9)
This Declaration of Conformity is issued under the sole responsibility of the manufacturer.
The object of the declaration described above is in conformity with the following EU Directives:

Radio Equipment Directive (2014/53/EU)			
Article 3.1a: (Health & Safety)	Article 3.1b: (EMC)	Article 3.2: (Radio Spectrum)	Article 3.3 d, e, f: (Cybersecurity)
EN 50665:2017	EN IEC 55014-1:2021	EN 300 220-1 V3.1.1	EN 18031-1:2024
EN IEC 62311:2020	EN IEC 55014-2:2021	EN 300 220-2 V3.1.1	EN 18031-2:2024
	EN 30 1 489-1 V2.2.3	EN 301 908-1 V15.2.1	
	EN 301 489-3 V2.3.2	EN 300 328 V2.2.2	
	EN 301 489-17 V3.3.1	EN 301 908-13 V13.2.1	
	EN 301 489-19 V2.2.1	EN 303 413 V1.2.1	
	EN 301 489-52 V1.3.1		
	EN IEC 61000-6-1:2019		
	EN IEC 61000-6-3:2021		

Machinery Directive(2006/42/EC)	RoHS Directive (2011/65/EU) and amending directive ((EU)2015/863)	Battery
EN 60335-1:2012 +A11:2014 +A13:2017 +A1:2019 +A14:2019 +A2:2019 +A15:2021	EN IEC 63000:2018	EN 62133-2:2017
EN 50636-2-107:2015+A1:2018+ A2:2020+A3:2021		

Signed for and on behalf of: Navimow B.V.

Place: Changzhou, China **Date:** 2025-08-22

Name: Crystal Zhuang **Function:** Certification Manager

Signature: Crystal Zhuang

магазин БАШ МАЙСТОРА профессиональные решения

EC Declaration of Conformity for Charging Station

Manufacturer

Name: Willand (Beijing) Technology Co., LTD.

Address: Room 203, A-1 Bldg. Zhongguancun Dongsheng Technology Park (Northern Territory), No. 66, Xixiaokou Rd, Haidian Dist., Beijing, China.

Email: support-navimow@rlm.segway.com

Authorized Representative

Name: AR Experts B.V.

Address: Boeingavenue 209, 1119 PD Schiphol-Rijk, The Netherlands

Email: info@certification-experts.com

Object of the declaration

Generic designation: Charging station for robotic lawn mower

Product name: Navimow Charging Station

Type/model: i1C00G

Serial number: Z0CQ x yyyy x y x yyyy ("x" indicates any letter from A-Z except O and I, "y" indicates any letter from A-Z except O and I or any number from 0-9)

This Declaration of Conformity is issued under the sole responsibility of the manufacturer.

The object of the declaration described above is in conformity with the following EU Directives:

Radio Equipment Directive (2014/53/EU)			RoHS Directive (2011/65/EU) and amending directive ((EU)2015/863)
Article 3.1a: (Health & Safety)	Article 3.1b: (EMC)	Article 3.2: (Radio Spectrum)	
EN IEC 62311:2020	EN IEC 61000-6-3:2021	EN 303 413 V1.2.1	EN IEC 63000:2018
	EN IEC 61000-6-1:2019	EN 300 220-1 V3.1.1	
	EN 301 489-1 V2.2.3	EN 300 220-2 V3.1.1	
	EN 301 489-3 V2.3.2		
	EN 301 489-19 V2.2.1		

Signed for and on behalf of: Navimow B.V.

Place: Changzhou, China **Date:** 2025-08-22

Name: Crystal Zhuang **Function:** Certification Manager

Signature: Crystal Zhuang

магазин БАШ МАЙСТОРА ПРОФЕСИОНАЛНИ РЕШЕНИЯ

6.3 Limited Warranty

Limited Warranty and Arbitration Agreement

NOTICE: PLEASE READ THIS LIMITED WARRANTY AND ARBITRATION AGREEMENT AND KEEP THIS AGREEMENT FOR FUTURE REFERENCE. THIS AGREEMENT CONTAINS LIMITED WARRANTY CLAUSES FOR CONSUMERS IN EUROPE AND ARBITRATION CLAUSES WITH RESPECT TO NAVIMOW (“PRODUCT”) AND ANY AND ALL TRANSACTION AND CLAIM RELATED TO AND/OR ARISING OUT OF THE PRODUCT.

THIS IS A BINDING LEGAL AGREEMENT (“AGREEMENT”) BETWEEN YOU (EITHER AN INDIVIDUAL OR ENTITY) AND THE MANUFACTURER (“WILLAND”), NAVIMOW B.V. ("NAVIMOW"), AND THEIR AFFILIATES (INCLUDING BUT NOT LIMITED TO THEIR PARENT COMPANY, SUBSIDIARY, AFFILIATED COMPANIES, PREDECESSOR, SUBSEQUENT COMPANY, ADMINISTRATORS, SUCCESSORS, ASSIGNS, OFFICERS, DIRECTORS, MANAGERS, EMPLOYEES, MEMBERS, SHAREHOLDERS, AND AGENTS, ATTORNEYS, INSURERS OR REINSURERS) (COLLECTIVELY “NAVIMOW PARTIES”), NAVIMOW DEALERS (AS DEFINED BELOW) AND THEIR AFFILIATES (COLLECTIVELY “NAVIMOW DEALERS”).

PURCHASING THE PRODUCT, OPENING THE PRODUCT PACKAGING, USING THE PRODUCT, RETAINING THE PRODUCT, EXPLOITING THE BENEFITS OF THIS AGREEMENT, OR ELECTRONIC ACCEPTANCE OF THIS AGREEMENT SHALL CONSTITUTE ACCEPTANCE OF THIS AGREEMENT. IN AN EVENT YOU, AS A PARENT(S) OR LEGAL GUARDIAN(S), PURCHASE THIS PRODUCT ON BEHALF OF OR FOR YOUR CHILDREN, YOU HEREBY CONSENT TO AND APPROVE IN ALL RESPECTS THE TERMS AND CONDITIONS OF THE AGREEMENT AND AGREE THAT BOTH YOU AND YOUR CHILDREN SHALL BE BOUND BY THIS AGREEMENT. YOU ACKNOWLEDGE AND AGREE THAT YOU RECEIVE SUFFICIENT NOTICE OF THIS AGREEMENT AND YOU AGREE TO THIS AGREEMENT.

Record your Product’s Serial Number

Record your Product’s Serial Number below. You can find the Serial Number on the exterior of the shipping box, or on the bottom of the Product.

Serial Number Here

Contacts

The Product is manufactured for Navimow B.V. (“Navimow”).

1. Limited Warranty

This Limited Warranty covers only defects of any material or quality of the Product and components when the Product and components thereof are being used under normal and ordinary conditions. In the event that a defect covered by this Limited Warranty occurs, Navimow and/or other Navimow Parties in its sole discretion will repair or replace the defective Product or components thereof in accordance with this Limited Warranty, or the date it was activated (the later date prevails) from either of Navimow, Navimow’s authorized reseller, Navimow’s authorized distributor, or an authorized Dealer (each a “Navimow Dealer” or collectively the “Navimow Dealers”).

Product covered by this warranty	Limited Warranty Period
i205 AWD, i206 AWD, i208 AWD, i210 AWD	3 years
Battery packs and power adapters	2 years

магазин БАТЕ МАЙСТОРА® професионални решения

Blades are seen as disposable and are not covered by this warranty.
THIS LIMITED WARRANTY HEREIN IS THE ONLY EXPRESS WARRANTY APPLICABLE TO PRODUCT AND ITS COMPONENT PARTS, ACCESSORIES, AND SERVICE REPAIR. NAVIMOW AND NAVIMOW PARTIES DISCLAIM ALL OTHER EXPRESS WARRANTIES. NAVIMOW AND OTHER NAVIMOW PARTIES LIMIT THE DURATION AND REMEDIES OF ALL IMPLIED WARRANTIES, INCLUDING WITHOUT LIMITATION TO THE WARRANTIES OF MERCHANTABILITY AND FITNESS FOR A PARTICULAR PURPOSE, WHETHER ARISING BY LAW, COURSE OF DEALING, COURSE OF PERFORMANCE, USAGE OF TRADE OR OTHERWISE, TO THE DURATION OF THIS EXPRESS LIMITED WARRANTY. THIS LIMITED WARRANTY DESCRIBES THE SERVICE AVAILABLE TO YOU IN THE EVENT YOUR PRODUCT REQUIRES WARRANTY SERVICE. THIS LIMITED WARRANTY IS AN ADDITIONAL WARRANTY, THAT DOES NOT IN ANY WAY AFFECT OR LIMIT THE STATUTORY RIGHTS YOU MAY HAVE AS A CONSUMER, FOR EXAMPLE, WITH RESPECT TO CONFORMITY, AND YOU MAY HAVE ADDITIONAL PROTECTIONS UNDER YOUR LOCAL LAWS.

2. Limited Warranty Service Process

Navimow's online services are available at navimow.com. During your use of the Product, if you believe the Product or its component is defective and/or does not work correctly. PLEASE IMMEDIATELY STOP USING THE PRODUCT, AND STORE THE PRODUCT PROPERLY. YOUR CONTINUED USE OF THE PRODUCT UNDER SUCH CIRCUMSTANCE MAY CAUSE SEVERE BODILY INJURY OR EVEN DEATH TO YOU OR THE OTHERS AND/OR CAUSE PROPERTY DAMAGES. Thereafter, please immediately contact Navimow at support-navimow@rlm.segway.com. or from Live Chat via the app Navimow's technical support personnel are available to assist you online in diagnosing the defect, and if any, and providing further instructions. In the event the warranty services are required, please prepare for the following materials, including (i) proof of the original purchase of the Product, (ii) the Product's serial number, and (iii) a description of the defect if applicable. Upon the verification of your eligibility for the Limited Warranty protection and/or services, you should provide your name, email address, mailing address, and contact phone number to us, we will guide you to get our service.
If you want to return the defective unit to service, you shall be responsible for the cost of shipping and risk of loss and damage that may occur during the shipment from you to Navimow and from Navimow to you. You must include your defective Product or component within the original or Navimow-approved packaging, which will be provided at your cost, for shipment of the Product to Navimow. You shall defend, indemnify, and hold Navimow harmless any loss and/or damages that may be caused by your improper packaging or shipment of the Product or component to Navimow.
An authorized service provider or Navimow Dealer will inspect your returned Product. If Navimow reasonably determines that the problem is not covered by the Limited Warranty, Navimow will notify you and inform you of service or replacement alternatives that are available to you on a fee basis, or Navimow will return your Product to you unrepaired, and in such instance, you will be responsible for the cost of shipping and insurance for shipment of your Product from Navimow to you.
In an event that any service is not covered by the limited warranty and you reject a paid service recommended by Navimow Parties and/or Navimow Dealer, you understand and acknowledge that failure to repair and/or services the Product may increase the risk of fall and/or Product failure which may result in severe property damages, severe bodily injury or death, and you agree that this is your informed consent to take such risk.
For a return eligible for the warranty protection and/or services, Navimow will serve defective Products with new or reconditioned parts of the same or similar style at no cost to you for the service. Parts replaced by Navimow will be retained by and become the property of Navimow. In such a situation, Navimow will pay reasonable return shipping charges for the return of the Product to you.

МАГАЗИН ВАШ МАЙСТОР®
продаж та ремонт техніки

3. Limited Warranty Eligibility

3.1 Your service request must be received by Navimow within the Limited Warranty Period as described above, and Navimow must receive your Product in accordance with the Limited Warranty Service Process defined above.

3.2 Your Product must be purchased from an authorized Navimow Dealer.

3.3 You must provide the original purchase receipt.

3.4 Your Product must have serial number legible, unobscured, untampered, and unmodified.

3.5 All tamper-resistant seals must be intact, in place, and unmodified.

4. Limited Warranty Exclusions

This Limited Warranty describes the service available to you if your product requires warranty service, and you may have additional protections under your local laws. This Limited Warranty does not cover and excludes damage to your product or any component thereof caused by:

4.1 Abuse, misuse, recklessness, negligence, or commercial use.

4.2 Improper charging, storage, maintenance, or operation of the Product not in compliance with instructions or limitations as provided in the user materials.

4.3 Use of the Product not in compliance with applicable laws and regulations.

4.4 Use of the Product by persons with inadequate experience.

4.5 Accident, collision, fire damage, water damage, chemical damage, use of the product outside of the product's working temperature range, high-pressure water spray, earthquake, dropping.

4.6 Modifications to mechanical parts, modification of electronic parts, or modifications to software embedded in the Product. 4.7 Service, repair, and maintenance by unauthorized providers.

4.8 Cosmetic damages.

4.9 Use of the Product with third-party product, component, or accessory.

4.10 The normal deterioration of wear and tear parts.

4.11 Use of the Product with overdue wear and tear parts.

5. LIABILITY DISCLAIMER AND LIMITATION

5.1 NAVIMOW PARTIES DO NOT ASSUME OR AUTHORIZE ANYONE TO ASSUME ON ITS BEHALF, ANY OTHER OBLIGATION OR LIABILITY IN CONNECTION WITH THE PRODUCT, ITS COMPONENT PARTS, ACCESSORIES, SERVICE REPAIR, OR THIS LIMITED WARRANTY.

5.2 NAVIMOW PARTIES AND NAVIMOW DEALERS ARE NOT RESPONSIBLE FOR ANY LOSS OF USE OF A PRODUCT, ITS COMPONENT PARTS, ACCESSORIES, OR FOR ANY INCONVENIENCE OR OTHER LOSS OR DAMAGE WHICH MIGHT BE CAUSED FROM ANY DEFECT IN A PRODUCT, ITS COMPONENT PARTS, ACCESSORIES, SERVICE REPAIR, OR FOR ANY OTHER INCIDENTAL OR CONSEQUENTIAL DAMAGES YOU MAY HAVE AS A RESULT OF ANY DEFECT IN A PRODUCT, ITS COMPONENT PARTS, ACCESSORIES, OR SERVICE REPAIR. SOME COUNTRIES DO NOT ALLOW THE EXCLUSION OR LIMITATION OF INCIDENTAL OR CONSEQUENTIAL DAMAGES, SO THE ABOVE LIMITATION OR EXCLUSION MAY NOT APPLY TO YOU TO THE EXTENT THAT IT IS DISALLOWED BY APPLICABLE LAW.

5.3 IN NO EVENT, NAVIMOW PARTIES AND NAVIMOW DEALERS' TOTAL AND AGGREGATE LIABILITY FOR ALL CLAIMS UNDER ANY AND ALL APPLICABLE LAW OR THEORY, JOINTLY OR SEVERALLY, ARISING OUT OF OR RELATED TO THE PURCHASE OF THE PRODUCT, USE OF THE PRODUCT, BREACH OF CONTRACT, TORTS (INCLUDING NEGLIGENCE) OR OTHERWISE, EXCEEDS THE DUTY TO REPAIR OR REPLACE ANY DEFECTIVE PRODUCT, FURTHER SUBJECT TO NAVIMOW'S SOLE AND EXCLUSIVE DISCRETION. IN NO EVENT SHALL NAVIMOW PARTIES AND NAVIMOW DEALERS BE LIABLE TO ANY PERSON FOR CONSEQUENTIAL, INDIRECT, INCIDENTAL, SPECIAL, EXEMPLARY, PUNITIVE OR ENHANCED DAMAGES ARISING OUT OF, OR RELATING TO, AND/OR IN CONNECTION WITH THE PURCHASE OF THE PRODUCT, ANY BREACH OF THIS AGREEMENT OR MANUFACTURER'S DUTIES REGARDLESS OF (A) WHETHER SUCH DAMAGES WERE FORESEEABLE, (B) WHETHER OR NOT NAVIMOW OR OTHER NAVIMOW PARTIES WERE ADVISED OF THE POSSIBILITY OF SUCH DAMAGES, AND (C) THE LEGAL OR EQUITABLE THEORY (CONTRACT, TORT OR OTHERWISE) UPON WHICH THE CLAIM IS BASED UNLESS SUCH LIMITATIONS AND EXCLUSIONS ARE PROHIBITED BY APPLICABLE LAW. THE FOREGOING LIMITATIONS OR EXCLUSIONS APPLY EVEN IF AN AGGRIEVED CUSTOMER OR ANY OTHER PERSON'S (WHO MIGHT HAVE RIGHT OR CLAIM UNDER THIS AGREEMENT BY OPERATION OF LAW OR EQUITY) REMEDIES UNDER THIS AGREEMENT FAIL THEIR ESSENTIAL PURPOSE. IN THE EVENT SOME COUNTRIES DO NOT ALLOW THE EXCLUSION OR LIMITATION OF CERTAIN OR ALL OF THE FOREGOING DAMAGES, SO TO THE EXTENT THAT SUCH LIMITATIONS OR EXCLUSIONS ARE NOT ALLOWED

Магазин БАШ МАЙСТОРА® профессионални решения

BY LAW, THEY MAY NOT APPLY TO YOU. SOME COUNTRIES DO NOT ALLOW THE EXCLUSION OR LIMITATION OF INCIDENTAL OR CONSEQUENTIAL DAMAGES, SO TO THE EXTENT THAT SUCH LIMITATIONS OR EXCLUSIONS ARE NOT ALLOWED BY LAW, THE ABOVE LIMITATION OR EXCLUSION MAY NOT APPLY TO YOU.

5.4 To the extent permitted by applicable law, NAVIMOW PARTIES and NAVIMOW DEALERS hereby DISCLAIM any liability and thereby shall not be responsible for any damages, including but not limited to death, bodily injury, or damages to property, arising out of or related to any conduct (including misconduct), action, inaction, act (including failure to act), omission or negligence by any authorized or unauthorized dealer, distributor, wholesaler, retailer, service provider or third party that involves into the distribution of Product or the services thereto. To the extent permitted by applicable law, the explicit representations and warranties, if any, provided herein, shall be the only warranties and representations made by NAVIMOW PARTIES to YOU, any consumer, and/or end-user. and NAVIMOW PARTIES shall not be responsible for any other warranties and/or representations that may be given and/or provided by another person unless NAVIMOW PARTIES have in a written form explicitly authorized such additional warranty and/or representation to be given to consumer or end-user.

6. Claims, Dispute Resolution and Arbitration

THE CLAUSES CONTAINED HEREIN ARE LEGALLY BINDING BETWEEN YOU (EITHER AN INDIVIDUAL OR ENTITY), AND NAVIMOW B.V., ITS AFFILIATES, NAVIMOW PARTIES AND NAVIMOW DEALERS. THE CLAUSES CONTAINED HEREIN MAY AFFECT YOUR RIGHTS, AND IT IS YOUR RESPONSIBILITY TO READ THE FOLLOWING SECTIONS. YOU CAN OPT OUT OF THE AGREEMENT WITHIN 30 CALENDAR DAYS OF THE FIRST CONSUMER PURCHASE BY EMAILING OPTOUT@SEGWAY.COM AND PROVIDING THE APPLICABLE INFORMATION. FOR MORE DETAILS, PLEASE SEE SECTION 6.2.

6.1 Binding Arbitration EN Navimow Parties, Navimow Dealers and you agree that any dispute, controversy or claim arising out of, relating to or in connection with this agreement, the limited warranty, the sale, condition or performance of the product, whether based in contract, tort, fraud, misrepresentation, or any other legal theory at law or in equity, including but not limited to any claims for death, injury or property damages, shall be governed by and construed in accordance with the laws of the Netherlands with the exclusion of its conflicts of law provisions.

Any disputes arising from, out of, or in connection with this Agreement shall be settled through friendly consultations between the Parties. In case no resolution can be reached through consultations, the dispute shall be submitted to the Arbitration Institute of the Netherlands (NAI) for arbitration which shall be conducted in accordance with its rules of in effect at the time of applying for arbitration. Both Parties further acknowledge and confirm that the arbitral award shall be final and binding upon all Parties, not subject to any appeal, and shall deal with the question of costs of arbitration and all matters related thereto. The enforcement of the arbitral award shall be conducted by a court of competent jurisdiction.

Further the Parties agree that:

i. The seat of the arbitration shall be Amsterdam, Netherlands.

ii. The Tribunal shall consist of 3 arbitrator(s).

iii. The language of the arbitration shall be English.

Section 6 “Claims, Dispute Resolution and Arbitration” clause shall survive upon termination or expiration of this agreement and/or limited warranty or in an event that this agreement and/or the limited warranty is held as void, avoidable, invalid, or unenforceable, either in whole or part, by a competent adjudication institution with actual authority and jurisdiction over this matter.

6.2 Opt-Out

YOU MAY OPT OUT OF THIS DISPUTE RESOLUTION PROCEDURE BY PROVIDING NOTICE TO NAVIMOW or NAVIMOW PARTIES NO LATER THAN THIRTY (30) CALENDAR DAYS AFTER THE DATE OF THE FIRST CONSUMER PURCHASER’S PURCHASE OF THE PRODUCT. TO OPT-OUT, YOU MUST SEND NOTICE BY EMAIL AT OPTOUT@SEGWAY.COM, WITH THE SUBJECT LINE: “ARBITRATION OPT-OUT.” THE OPT-OUT NOTICE BY E-MAIL MUST INCLUDE (A) YOUR NAME, EMAIL ADDRESS, MAILING ADDRESS, AND PHONE NUMBER; (B) THE DATE ON WHICH THE PRODUCT WAS PURCHASED; (C) THE PRODUCT MODEL NAME OR MODEL NUMBER; AND (D) THE SERIAL NUMBER. ALTERNATIVELY, YOU MAY OPT OUT BY SENDING AN ELECTION TO OPT-OUT LETTER TO NAVIMOW AT Teleportboulevard 130, ScaleHub Office B2.01,1043EJ Amsterdam, The Netherlands. CERTIFIED MAIL WITHIN THIRTY (30) CALENDAR DAYS FROM THE DATE OF THE FIRST END USER’S PURCHASE OF THE PRODUCT FROM NAVIMOW DEALER. THE OPT-OUT LETTER SHALL CONTAIN THE FOLLOWING INFORMATION: (A) YOUR NAME, EMAIL ADDRESS, MAILING ADDRESS, AND PHONE NUMBER; (B) THE DATE ON WHICH THE PRODUCT WAS PURCHASED; (C) THE PRODUCT MODEL NAME OR MODEL NUMBER; (D) THE SERIAL NUMBER; AND

(E) AN STATEMENT AS FOLLOWS: THE ABOVE CONSUMER ELECTS TO OPT-OUT OF THE DISPUTE RESOLUTION PROCEDURE AS PROVIDED BY THIS LIMITED WARRANTY, THESE ARE THE ONLY TWO EFFECTIVE WAYS TO OPT-OUT OF THIS DISPUTE RESOLUTION PROCEDURE. ELECTION TO OPT-OUT THIS DISPUTE RESOLUTION PROCEDURE WILL NOT AFFECT THE COVERAGE OF THE LIMITED WARRANTY IN ANY WAY, AND YOU WILL CONTINUE TO ENJOY THE BENEFITS OF THE LIMITED WARRANTY.

6.3 Language

This Agreement may be translated into different languages. In the event of a conflict, the English version shall prevail and control.

7. Intended third Party Beneficiary

(a) If a natural person receives a Product that is new as a gift from its original purchaser and this recipient does not become a party to this Agreement, this recipient shall be deemed as an intended third-party beneficiary to this Agreement. (b) If (i) a natural person is in the family or household of a purchaser of Product, (ii) it is reasonable to expect that such person may use, consume, or be affected by the Product, and (iii)this person is not a party to this Agreement, this person shall be deemed as an intended third-party beneficiary to this Agreement.

8. Statute of Limitation

The parties agree that any dispute, controversy, or claim arising out of, related to, or in connection with this Agreement, the limited warranty, the sale, condition, or performance of the Product, whether based in contract, tort, fraud, misrepresentation or any other legal theory at law or in equity, including but not limited to any claims for death, injury or property damages, must be commenced within one year after the cause of action has occurred.

9. Severability

If any term, clause, or provision of this Agreement is invalid, illegal or unenforceable in any jurisdiction, such invalidity, illegality, or unenforceability shall not affect any other term, clause or provision of this Agreement or invalidate or render unenforceable such term, clause or provision in any other jurisdiction. Upon a determination that any term, clause, or provision is invalid, illegal, or unenforceable, the parties shall negotiate in good faith, and if negotiation fails, the arbitral tribunal may modify this Agreement to give effect to the original intent of the parties as closely as possible in order that the transactions contemplated hereby be consummated as originally contemplated to the greatest extent possible.

6.4 Certifications

European Union Compliance Statement

Information on Disposal for Users of Waste Electrical & Electronic Equipment

This symbol on the product or on its packaging indicates that used electrical and electronic products should not be mixed with unsorted municipal waste. For proper treatment, it is your responsibility to dispose of your waste equipment by arranging to return it to designated collection points.

Disposing of this product correctly will help save valuable resources and prevent any potential negative effects on human health and the environment, which could otherwise arise from inappropriate waste handling.

To return your used device, please use the return and collection systems or contact the retailer where the product was purchased, which is free of charge, please contact your local authority for further details of your nearest designated collection point.

Penalties may be applicable for incorrect disposal of this waste, in accordance with your national legislation.

магазин БАШ МАЙСТОРА професионални решения

Information on Disposal for Users of used batteries

This symbol means that batteries and accumulators, at their end-of-life, should not be mixed with unsorted municipal waste. Your participation is an important part of the effort to minimize the impact of batteries and accumulators on the environment and on human health. For proper recycling you can return this product or the batteries or accumulators it contains to your supplier or to a designated collection point, which is free of charge.
Disposing of this product correctly will help save valuable resources and prevent any potential negative effects on human health and the environment, which could otherwise arise from inappropriate waste handling.
Penalties may be applicable for incorrect disposal of this waste, in accordance with your national legislation. there are separate collection systems for used batteries and accumulators.
Please, dispose of batteries and accumulators correctly at your local community waste collection/recycling center.

Restriction of the use of certain hazardous substances (RoHS) Directive

Navimow B.V. hereby declares the whole product including parts (cables, cords, and so on) meets the requirements of RoHS Directive 2011/65/EU and amendment Commission Delegated Directive (EU) 2015/863 on the restriction of the use of certain hazardous substances in electrical and electronic equipment ("RoHS recast" or "RoHS 2.0").

Radio Equipment Directive

Navimow B.V. hereby declares that the product listed in this section comply with the essential requirements and other relevant provisions of the Radio Equipment Directive 2014/53/EU.

Machinery Directive

Navimow B.V. hereby declares that the product listed in this section comply with the essential requirements and other relevant provisions of the Machinery Directive 2006/42/EC.

Europe Authorised Representative:

AR Experts B.V., Boeingavenue 209, 1119 PD Schiphol-Rijk, The Netherlands
Navimow B.V. hereby declares that the product comply with the essential requirements and other relevant provisions of the RoHS Directive 2011/65/EU and amendment Commission Delegated Directive (EU) 2015/863, the Radio Equipment Directive 2014/53/EU and the Machinery Directive 2006/42/EC.

Electromagnetic Compatibility

Navimow B.V. declares that the equipment listed in this section are in compliance with the essential requirements and other relevant provisions of the Electromagnetic Compatibility 2014/30/EU.

магазин БАШ МАЙСТОРА® професионални решения

SRD	Frequency Band(s)	865.05-867.9MHz/865.05-867.9MHz
	Max. RF Power	≤13.98dBm (ERP)
Bluetooth-LE	Frequency Band(s)	2402-2480MHz/2402-2480MHz
	Max. RF Power	≤10.00dBm (EIRP)
802.11b/g/n/ax	Frequency Band(s)	2412-2472MHz/2412-2472MHz
	Max. RF Power	≤20.00dBm (EIRP)
LTE Band 1	Frequency Band(s)	1920-1980MHz/2110-2170MHz
	Max. RF Power	25dBm (Conducted Rated)
LTE Band 3	Frequency Band(s)	1710-1785MHz/1805-1880MHz
	Max. RF Power	25dBm (Conducted Rated)
LTE Band 7	Frequency Band(s)	2500-2570MHz/2620-2690MHz
	Max. RF Power	25dBm (Conducted Rated)
LTE Band 8	Frequency Band(s)	880-915MHz/925-960MHz
	Max. RF Power	25dBm (Conducted Rated)
LTE Band 20	Frequency Band(s)	832-862MHz/791-821MHz
	Max. RF Power	25dBm (Conducted Rated)
LTE Band 28	Frequency Band(s)	703-748MHz/758-803MHz
	Max. RF Power	25dBm (Conducted Rated)

GNSS Specification	GNSS Signal Designations	RNSS Frequency Band (MHz)
GPS	L1 C/A	1559-1610
	L2C	1215-1300
	L5	1164-1215
Galileo	E1	1559-1610
	E5b	1164-1215
	E5a	1164-1215
BDS	B1C	1559-1610
	B1I	1559-1610

магазин БАШ МАЙСТОРА® професионални решения

7.Contact Us

Manufacturer: Willand (Beijing) Technology Co., LTD.
Address: Room 203, A-1 Bldg. Zhongguancun Dongsheng Technology Park (Northern Territory), No. 66, Xixiaokou Rd, Haidian Dist., Beijing, China.
Email: support-navimow@rlm.segway.com
Manufactured for: Navimow B.V.
Address: Teleportboulevard 130, ScaleHub Office B2.01,1043EJ Amsterdam, The Netherlands.
Europe Authorised Representative: AR Experts B.V., Boeingavenue 209, 1119 PD Schiphol-Riik, The Netherlands.
Email: info@certification-experts.com
Website: navimow.com
Contact us if you experience issues relating to the operation, maintenance and safety, or errors/faults with your mower.

МАГАЗИН БАШ МАЙСТОРА ® ПРОФЕСИОНАЛНИ РЕШЕНИЯ

NAVIMOW

МАГАЗИН БАШ МАЙСТОРА®
ПРОФЕСИОНАЛНИ РЕШЕНИЯ