Technical information
Explosion drawing and parts list

Hand end trimmer RC21E (Ref. 2100000)
(*) Parts not mounted in the current version

Pos.	Code	Vrs.	Serie	Item
1	2102179			END TRIMMER BODY
2	2126078			SPRING
3	2122140			ROD
4	2122141			ROD
5	2102180	B0		SLIDE
* 5	2145244			END TRIMMER SLIDE WITH SCREWS
6	2150112			SPARE BLADES SET FOR RC21E
7	9073005			FLAT HD. SCREW M.4X8 PH.
8	2102181			LEVER
9	8478018	B1	103575	SCREW M.4X10
* 9	7070023	B0		FLAT HD. TAPPING SCREW 6X1/2 PH.BZ.
* 9	2173026			SCREW M.4X12
10	2119136			LABEL
11	1685018			SQUARE NUT M.4

магазин БАШ МАЙСТОРА ПРОФЕСИОНАЛНИ РЕШЕНИЯ

Technical information
Explosion drawing and parts list

Hand end trimmer RC21E (Ref. 2100000)
Edition B

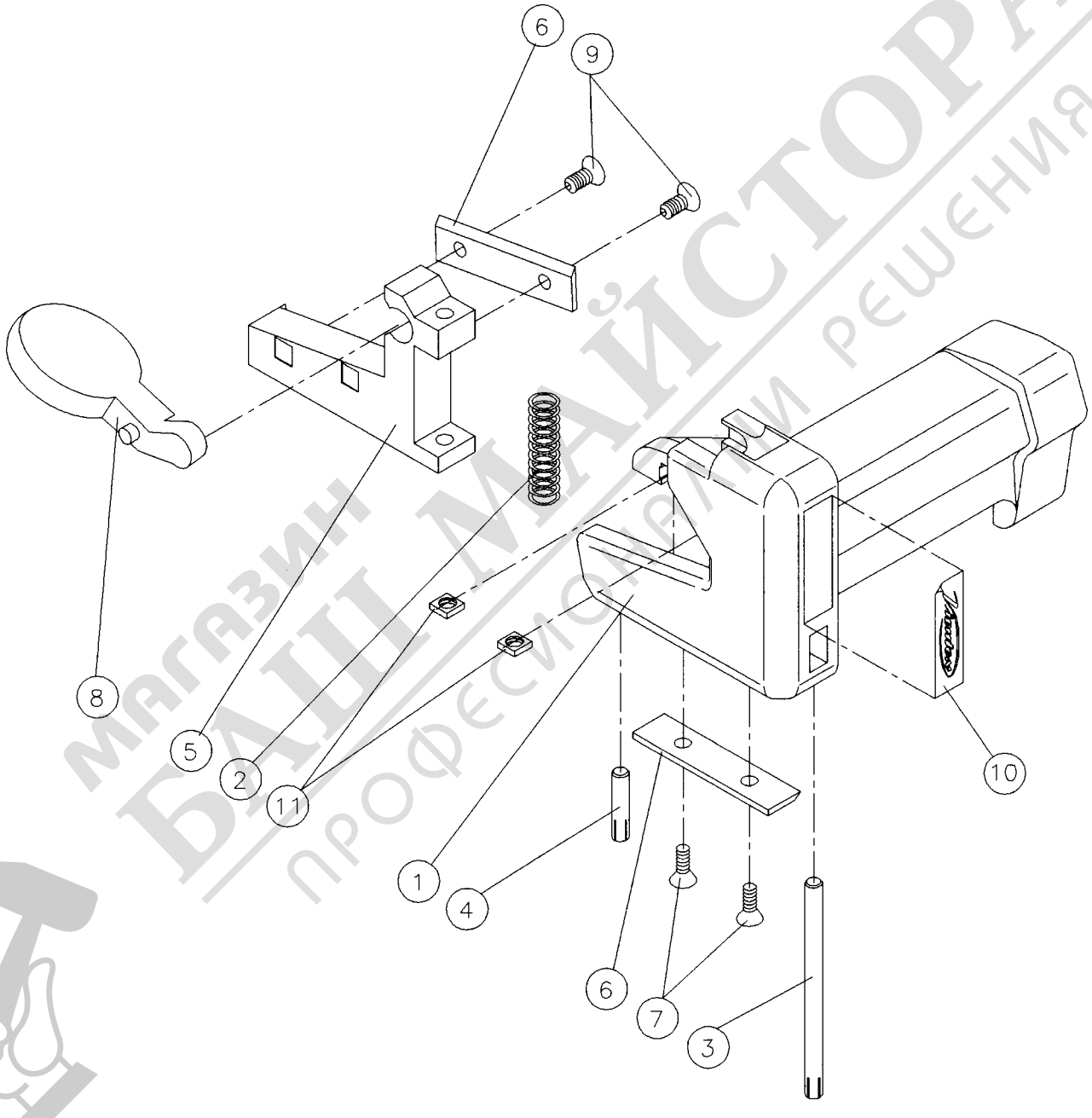

магазин БАШ МАЙСТОРА® професионални решения

Technical information
Explosion drawing and parts list

Hand end trimmer RC21E (Ref. 2100000)
Edition A

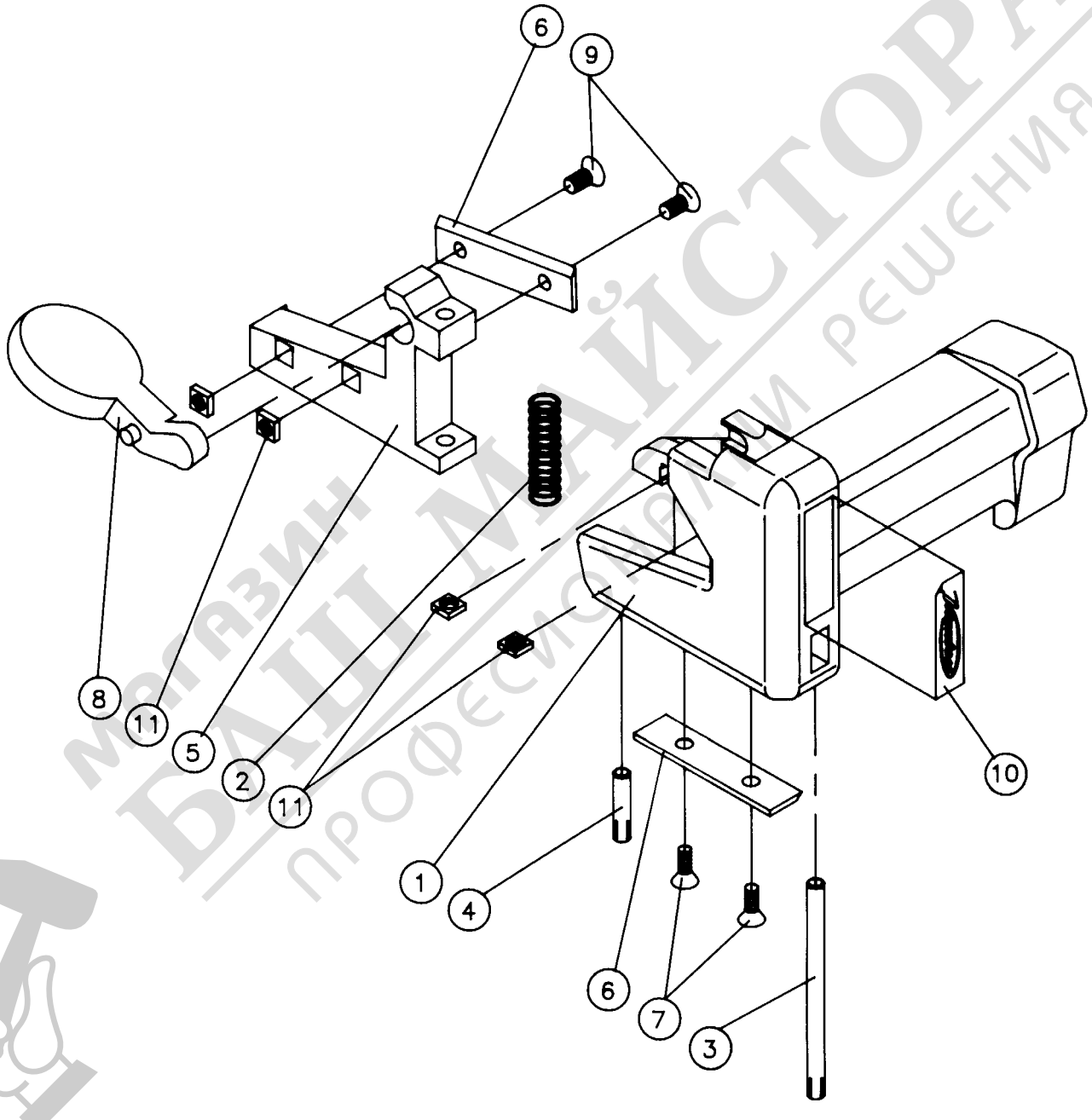

магазин БАШ МАЙСТОРА® профессионални решения