X20 Parts List

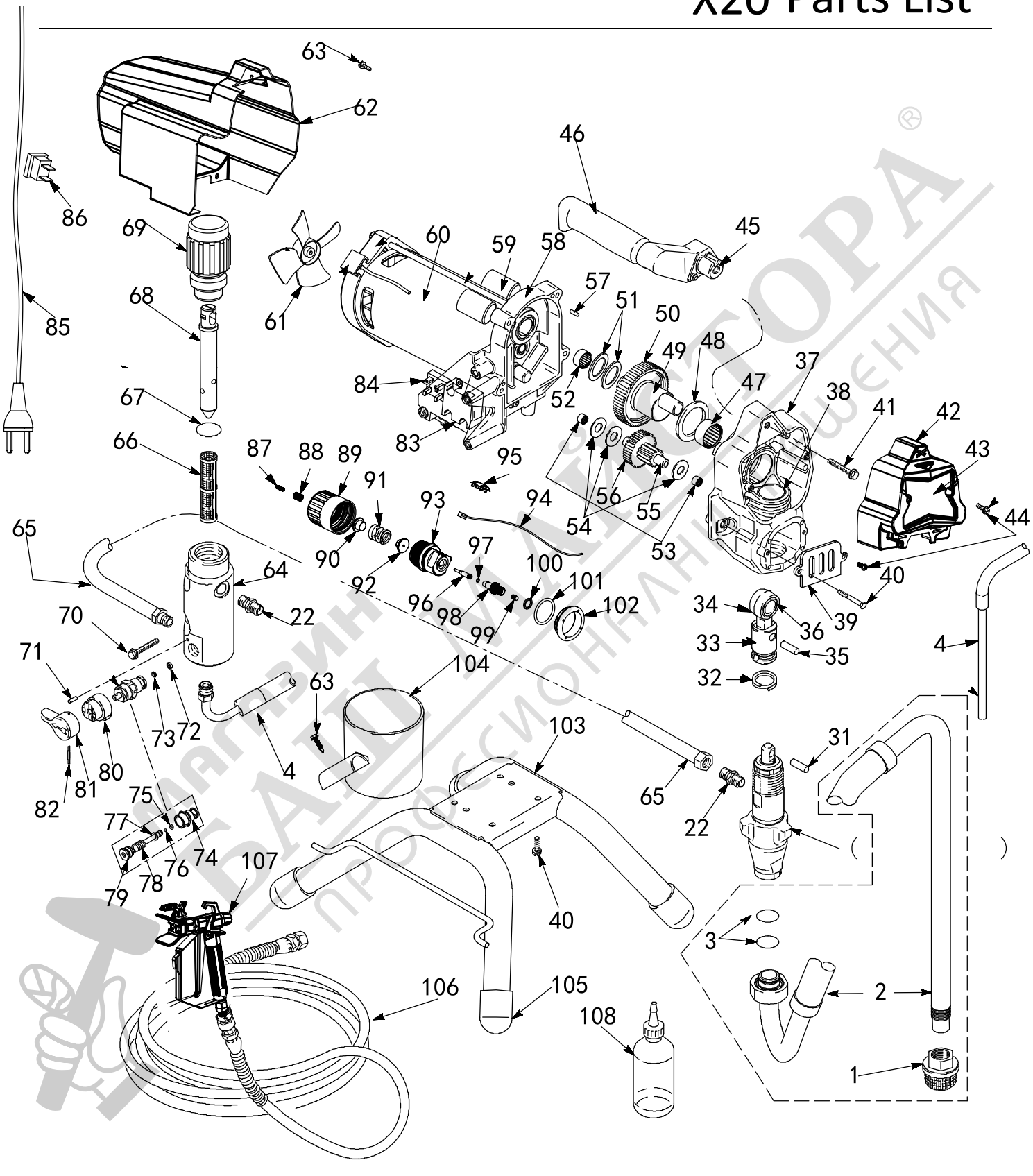

X20 Parts List

No.	Description	Part No.	Qty
1	X20-X32 Strainer	1.16.05.05	1
2	X20-X32 Suction hose, Rubber	1.16.05.06	1
3	X20-X32 O-ring, suction hose	1.05.01.28	2
4	X20-X32 Hose, drain	1.16.05.08	1
5	X20 X24 Valve, intake	1.06.03.02	1
6	X20 X24 X28 O-ring	1.04.02.08	1
7	X20 Seat, carbide	1.08.02.03	1
8	X24 X32 Ball, inlet	1.09.01.02	1
9	X24 X32 Guide, ball	1.06.04.03	1
10	X20 X24 Valve, piston	1.06.06.03	1
11	X24 X32 Seat, piston valve	1.08.01.02	1
12	X20 X24 Guide, piston	1.04.02.10	1
13	X20 X24 Gland, female, piston	1.06.09.02	1
14	X20 X24 V-packing, piston	1.04.02.09	3
15	X20 X24 V-packing, Leather, piston	1.05.01.03	2
16	X20 X24 Gland, male, piston	1.06.09.03	1
17	X20 X24 X32 Ball	1.09.02.02	1
18	X20 X24 Piston rod	1.06.05.05	1
19	X20 X24 O-ring	1.04.02.11	2
20	X20 X24 Sleeve, cylinder	1.06.02.01	1
21	X20 X24 Cylinder, pump	1.06.03.01	1
22	Nipple, 1/4"	1.06.07.01	3
23	X20 X24 X28 Gland, male, throat	1.06.09.04	1
24	X20 X24 X28 V-packing, throat	1.04.02.13	3
25	X20 X24 X28 V-packing, leather, throat	1.05.01.04	2
26	X20 X24 X28 Gland, femal, throat	1.06.09.15	1
27	X20 X24 X28 O-ring	1.05.01.09	1
28	X20 X24 X28 Nut, packing	1.06.09.05	1
29	X20 X24 X28 Button, plug	1.05.02.01	1
30	X20 X24 X28 Nut, jam, pump	1.01.06.09	1
31	X20 X24-X32 Pin, straight	1.01.06.06	1
32	X20 X24 X28 X32 Clip, connecting rod	1.01.04.12	1
33-36	X20-X32 Rod, connecting	1.01.10.06	1
37	X20 X24 X28 Housing, drive	1.02.08.01	1
38	X20 X24 X28 X32 Sleeve, connecting rod	1.03.04.02	1
39	X20 X24 X28 X32 Cover, pump rod	1.04.08.05	1
40	M6 Screw	1.01.01.41	8
41	M8x40 Screw	1.01.01.50	1
42	X20-X32 Cover, front	1.04.01.25	1
43	X20-X32 Label, front	1.18.02.10	1
44	M4 Screw	1.01.01.38	4
45	X20-X32 Insert, handle	1.03.03.12	1
46	X20-X32 Grip, Handle	1.04.08.04	1
47	X20-X32 Needle bearing, crankshaft gear	1.01.14.11	1
48	X20-X32 Bearing, throat	1.01.05.16	1
49	X20 X24 X28 Ecccentric shaft	1.01.06.07	1
50	X20-X32 Gear, crankshaft	1.01.13.03	1
51	X20 -X32 Bearing, thrust washer	1.01.05.17	2
52	X20-X32 Needle bearing, small	1.01.14.10	1
53	X20-X32 Needle bearing, small	1.01.14.09	2
54	X20-X32 Bearing, thrust washer	1.01.05.18	3
55	X20-X32 Gear shaft	1.01.13.08	1
56	X20-X32 Gear, reducer	1.01.13.09	1
57	X20-X32 Screw	1.06.11.04	2
58	X20-X32 Support, motor	1.02.08.03	1
59	X20 Capacitor	1.07.05.25	1
60	X20 Motor	1.07.03.06	1
61	X20 Fan, motor	1.04.01.20	1
62	X20 Shield, motor	1.04.01.29	1
63	M5 Screw	1.01.01.40	2
64	X20-X32 Manifold	1.02.05.05	1
65	X20-X32 Hose	1.16.05.09	1
66	X20-X32 Filer, fluid, 60 mesh	1.16.05.25	1
67	X20 -X32 O-ring, manifold	1.04.02.52	1
68	X20-X32 Insert, filter	1.04.08.08	1

No.	Description	Part No.	Qty
69	X20-32 Cap, manifold	1.02.05.04	1
70	M6 Screw	1.01.01.42	2
71	Pin, drain valve	1.01.04.14	1
72	Gasket	1.04.02.54	1
73	Ball, valve, drain	1.09.03.02	1
74	Valve, drain	1.06.06.09	1
75	O-ring, valve, drain	1.05.01.07	2
76	Ball, valve, drain	1.09.03.02	1
77	Steam, valve, drain	1.06.11.09	1
78	Spring, valve, drain	1.01.04.17	1
79	Handle, valve, drain	1.01.06.23	1
80	Base, valve	1.04.04.03	1
81	Handle, valve, drain	1.04.04.04	1
82	Pin, grooved	1.06.11.08	1
83	SCR	1.07.06.09	1
84	Silicon Bridge	1.07.06.07	1
85	X20-X32 Power plug (European plug)	1.07.02.15	1
86	ON/OFF Switch	1.07.04.05	1
87-102	Pressure regulator	1.01.01.52	1
88		1.03.03.11	1
89		1.04.03.06	1
90		1.03.02.04	1
91		1.01.04.11	1
92		1.03.02.03	1
93		1.04.03.05	1
94		1.07.01.22	1
95		1.04.03.03	1
96		1.06.11.02	1
97		1.05.01.02	1
98		1.03.02.01	1
99		1.04.03.01	1
100		1.04.02.36	1
101		1.05.01.06	1
102		1.04.03.02	1
103	X20-X28 Frame, standmount	1.01.02.07	1
104	X20-X32 Cup, suction/drain	1.04.01.28	1
105	X20-X32 Cap, leg	1.04.08.10	4
106	High Pressure Hose 1/4x15M	.51.04.002	1
107	Airless Spray Gun	3.X450	1
108	lubricate Oil	1.16.03.02	1

X24 X28 X32 Parts List

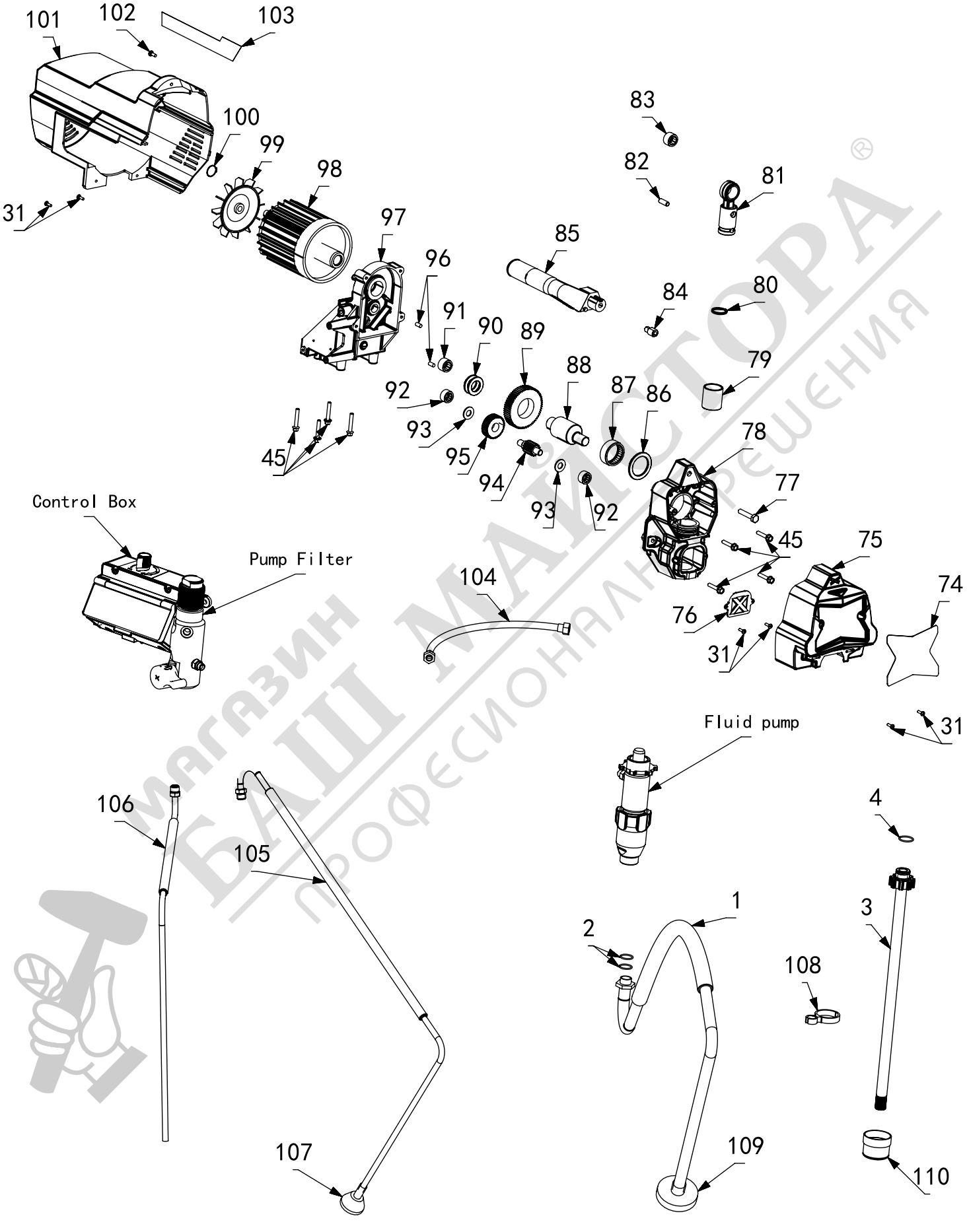

магазин БАШ МАЙСТОРА® професионални решения

X20/24/28/32H Frames

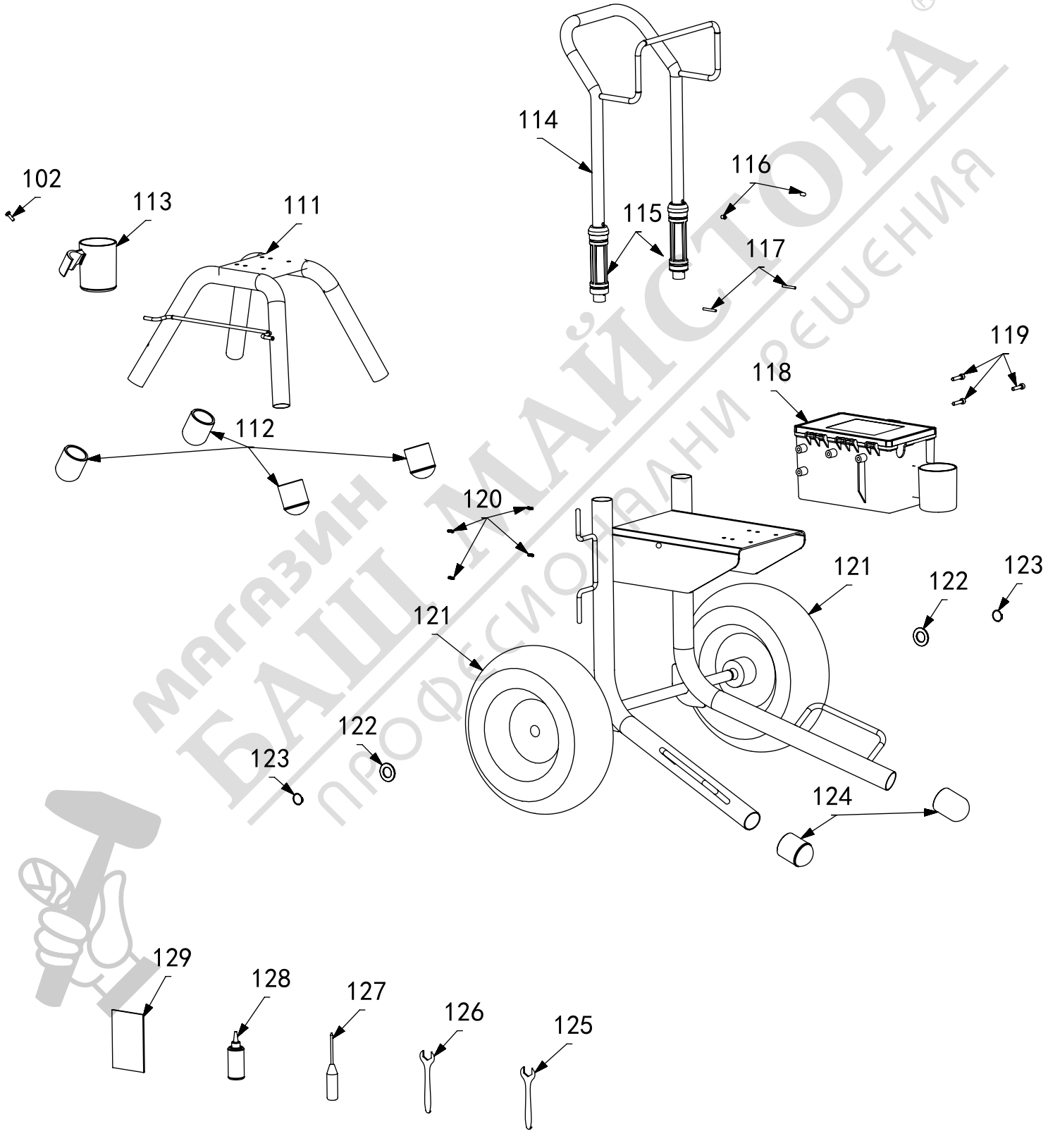

магазин БАШ МАЙСТОРА® професионални решения

X20/24/28/32 Fluid Pump

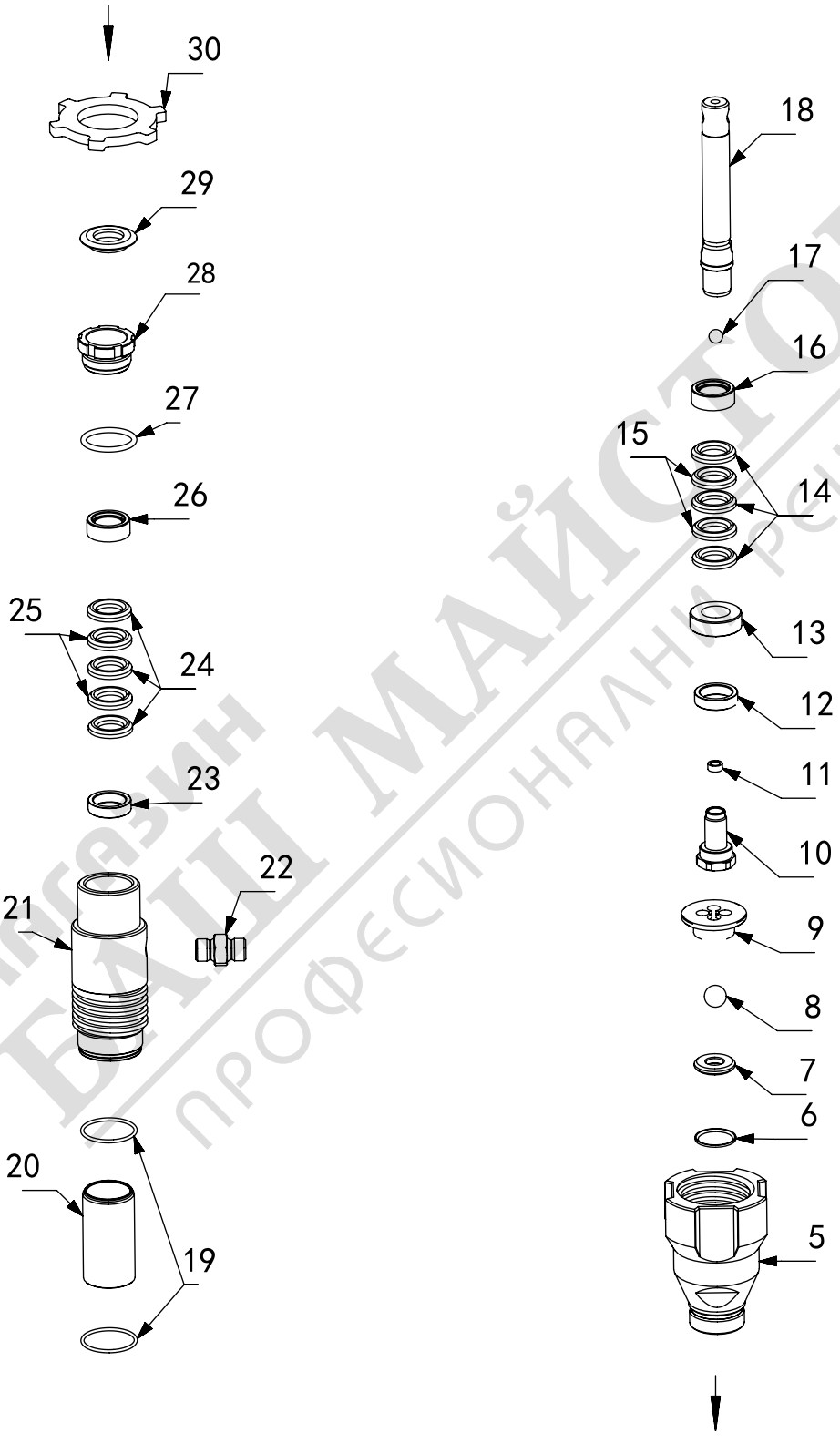

магазин БАШ МАЙСТОРА® ПРОФЕСИОНАЛНИ РЕШЕНИЯ

X24/28/32 Filter & Control box

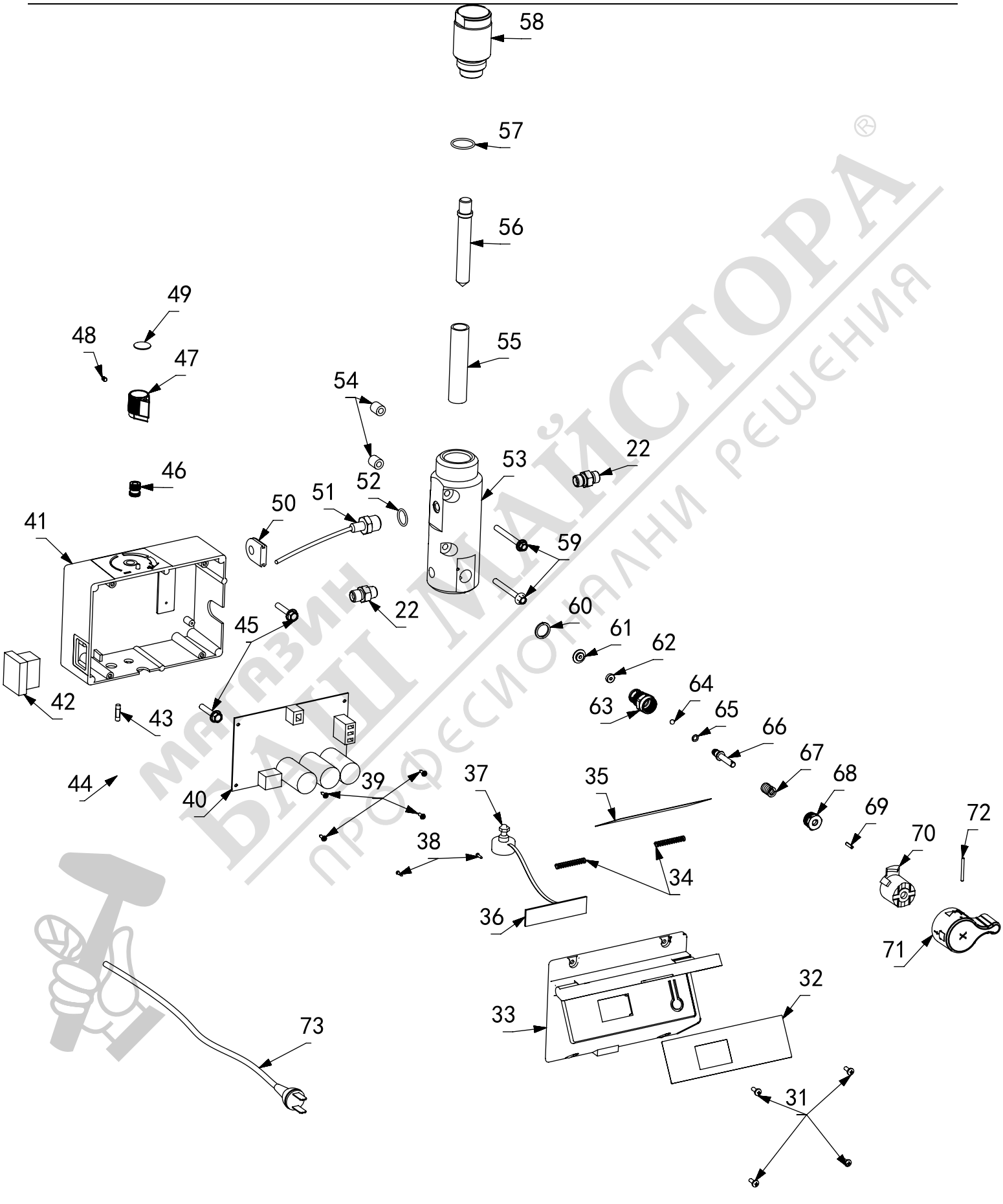

магазин БАЩ МАЙСТОРА® професионални решения

X24/28/32 Parts List

No.	Description	Part No.	Qty	No.	Description	Part No.	Qty
1	X24H X28H Suction hose, Rubber	1.16.05.06	1	19	X20 X24 O-ring	1.04.02.11	2
	X32 Suction hose, Rubber	1.16.05.07	1		X28 O-ring	1.04.02.16	2
2	X24 X32 O-ring, suction hose	1.05.01.28	2		X32 O-ring	1.04.02.19	2
3	X32H Suction hose, Alu. straight	1.16.05.21	1	20	X20 X24 Sleeve, cylinder	1.06.02.01	1
	X24H X28H Suction hose, Alu. straight	1.16.05.24	1		X28 Sleeve, cylinder	1.06.02.02	1
4	X24H X32H O-ring, suction hose	1.05.01.34	1		X32 Sleeve, cylinder	1.06.02.03	1
5	X20 X24 Valve, intake	1.06.03.02	1	21	X20 X24 Cylinder, pump	1.06.03.01	1
	X28 Valve, intake	1.06.03.05	1		X28 Cylinder, pump	1.06.03.03	1
	X32 Valve, intake	1.06.03.06	1		X32 Cylinder, pump	1.06.03.07	1
6	X24 X32 O-ring	1.04.02.08	1	22	Nipple, 1/4"	1.06.07.01	3
7	X24 X28 Seat, carbide	1.08.02.03	1	23	X20 X24 X28 Gland, male, throat	1.06.09.04	1
	X32 Seat, carbide	1.08.02.02	1		X32 Gland, male, throat	1.06.09.19	1
8	X24 X32 Ball, inlet	1.09.01.02	1	24	X20 X24 X28 V-packing, throat	1.04.02.13	3
9	X28 Guide, ball	1.06.04.02	1		X32 V-packing, throat	1.04.02.23	3
	X24 X32 Guide, ball	1.06.04.03	1	25	X20 X24 X28 V-packing, leather, throat	1.05.01.04	2
10	X20 X24 Valve, piston	1.06.06.03	1		X32 V-packing, leather, throat	1.05.01.19	2
	X28 X32 Valve, piston	1.06.06.04	1	26	X20-X28 Gland, femal, throat	1.06.09.15	1
11	X24 X32 Seat, piston valve	1.08.01.02	1		X32 Gland, femal, throat	1.06.09.20	1
12	X20 X24 Guide, piston	1.04.02.10	1	27	X20 X24 X28 O-ring	1.05.01.09	1
	X28 X32 Guide, piston	1.04.02.20	1		X32 O-ring	1.05.01.25	1
13	X20 X24 Gland, female, piston	1.06.09.02	1	28	X20 X24 X28 Nut, packing	1.06.09.05	1
	X28 X32 Gland, female, piston	1.06.09.17	1		X32 Nut, packing	1.06.09.21	1
14	X20 X24 V-packing, piston	1.04.02.09	3	29	X20 X24 X28 Button, plug	1.05.02.01	1
	X28 V-packing, piston	1.04.02.13	3		X32 Button, plug	1.05.02.03	1
	X32 V-packing, piston	1.04.02.18	3	30	X20 X24 X28 Nut, jam, pump	1.01.06.09	1
15	X20 X24 V-packing, Leather, piston	1.05.01.03	2		X32 Nut, jam, pump	1.01.06.16	1
	X28 V-packing, Leather, piston	1.05.01.04	2	31	M4 Screw	1.01.01.38	10
	X32 V-packing, Leather, piston	1.05.01.20	2	32	X24-X32 Label, display	1.18.02.13	1
16	X24 Gland, male, piston	1.06.09.03	1	33	X24-X32 Box, control	1.04.01.24	1
	X28-X32 Gland, male, piston	1.06.09.18	1	34	X24-X32 Spring, control box	1.01.04.13	2
17	X20 X24 X32 Ball	1.09.02.02	1	35	X24-X32 Label, control	1.18.02.09	1
18	X20 X24 Piston rod	1.06.05.05	1	36	X24-X32 Board, Digital Display	1.07.05.16	1
	X28 Piston rod	1.06.05.06	1	37	X24-X32 Potentiomater, adjust pressure	1.07.05.17	1
	X32 Piston rod	1.06.05.03	1	38	ST2.2 Screw	1.01.01.43	2

ВАШ МАЙСТОР
професионални решения

X24/28/32 Parts List

No.	Description	Part No.	Qty
39	Screw	1.01.01.06	4
40	X24 Control Board	1.07.05.18	1
	X28 Control Board	1.07.05.19	1
	X32 Control Board	1.07.05.20	1
41	X24-X32 Box, control	1.02.07.01	1
42	X20-X32 ON/OFF Switch	1.07.04.05	1
43	X24-X32 Fuse	1.07.06.08	1
44	Power plug	1.07.01.21	1
45	M6 Screw	1.01.01.41	8
46	Insert, potentiometer	1.03.03.11	1
47	Knob, potentiometer	1.04.05.06	1
48	Nut, potentiometer	1.01.01.52	1
49	X24-X32 Label, potentiometer	1.18.02.14	1
50	Grommet, transducer	1.05.02.02	1
51	Transducer	1.07.05.10	1
52	Packing, O-ring	1.04.02.59	1
53	X20-X32 Manifold	1.02.05.05	1
54	Packing, O-ring	1.02.05.08	2
55	X20-X32 Filer, fluid, 60 mesh	1.16.05.25	1
56	X20-X32 Insert, filter	1.04.08.08	1
57	X20 -X32 O-ring, manifold	1.04.02.07	1
58	X20-32 Cap, manifold	1.02.05.04	1
59	M6 Screw	1.01.01.42	2
60	Gasket	1.02.10.03	1
61	Gasket	1.04.02.54	1
62	Seat, valve, drain	1.08.03.02	1
63	Valve, drain	1.06.06.09	1
64	Ball, valve, drain	1.09.03.02	1
65	O-ring, valve, drain	1.05.01.07	2
66	Steam, valve, drain	1.06.11.09	1
67	Spring, valve, drain	1.01.04.17	1
68	Handle, valve, drain	1.01.06.23	1
69	Pin, drain valve	1.01.04.14	1
70	Base, valve	1.04.04.08	1

No.	Description	Part No.	Qty
71	X51L Handle, valve, drain	1.04.04.07	1
72	X51L Pin, grooved	1.06.11.08	1
73	X20-X32 Power plug (European plug)	1.07.02.15	1
74	X20-X32 Label, front	1.18.02.10	1
75	X20-X32 Cover, front	1.04.01.25	1
76	X20 X24 X28 X32 Cover, pump rod	1.04.08.05	1
77	M8x40 Screw	1.01.01.50	1
78	X20 X24 X28 Housing, drive	1.02.08.01	1
	X32 Housing, drive	1.02.08.02	1
79	X20 X24-X32 Sleeve, connecting rod	1.03.04.02	1
80	X20-X32 Clip, connecting rod	1.01.04.12	1
81	X20-X32 Rod, connecting	1.01.10.06	1
82	X20 X24-X32 Pin, straight	1.01.06.06	1
83	X24-X32 Needle bearing, rod, connecting	1.01.14.08	1
84	X20-X32 Insert, handle	1.03.03.12	1
85	X20-X32 Grip, Handle	1.04.08.04	1
86	X20-X32 Bearing, throat	1.01.05.16	1
87	X20-X32 Needle bearing, crankshaft gear	1.01.14.11	1
88	X20 X24 X28 Ecccentric shaft	1.01.06.07	1
	X32 Ecccentric shaft	1.01.06.12	1
89	X20-X32 Gear, crankshaft	1.01.13.03	1
90	X20 -X32 Bearing, thrust washer	1.01.05.17	2
91	X20-X32 Needle bearing, small	1.01.14.10	1
92	X20-X32 Needle bearing, small	1.01.14.09	2
93	X20-X32 Bearing, thrust	1.01.05.18	2
94	X20-X32 Gear shaft	1.01.13.08	1
95	X20-X32 Gear, reducer	1.01.13.04	1

Магазин БАШ МАЙСТОРА® Професионални решения

X24/28/32 Parts List

No.	Description	Part No.	Qty
96	X20-X32 Screw	1.06.11.04	2
97	X20-X32 Support, motor	1.02.08.03	1
98	X24 Motor	1.07.03.08	
	X28 Motor	1.07.03.09	
	X32 Motor	1.07.03.10	1
99	X20-X32 Fan, motor	1.04.01.20	1
100	X24-X32 Locking circlip, fan	1.01.04.16	1
101	X24-X32 Shield, motor	1.04.01.26	1
102	M5 Screw	1.01.01.40	2
103	X24 Label, side	1.18.02.11	1
	X28 Label, side	1.18.02.12	1
	X32 Label, side	1.18.02.18	1
104	X20-X32 Hose	1.16.05.09	1
105	X24-X32 Hose, drain	1.16.05.08	1
106	X24H-X32H Hose, drain	1.16.05.20	1
107	X51L Deflector, threaded	1.04.01.42	1
108	X24H-X32H Clip, drain line	1.16.04.18	1
109	X24-X32 Strainer	1.16.05.05	1
110	X32H-X51L Strainer	1.16.05.26	1
111	X20-X28 Frame, standmount	1.01.02.07	1
	X32 Frame, standmount	1.01.02.11	1
112	X20-X32 Cap, leg	1.04.08.10	4
113	X20-X32 Cup, suction/drain	1.04.01.28	1
114	X24H-X32H Frame, cart	1.01.02.10	1
115	X24H-X32H Sleeve, cart	1.04.08.09	2
116	X24H-X51L Pin, cart	1.01.06.21	2
117	X24H-X51L Button, snap	1.01.04.21	2

No.	Description	Part No.	Qty
118	X51L Tool Box	1.04.01.36	1
119	Screw	1.01.01.23	3
120	Screw	1.01.01.44	4
121	X51L Wheel	1.14.02.01	2
122	X51L Cap, hub	1.01.05.23	2
123	X51L Clip, retaining	1.01.04.18	2
124	X24H-X32H Cap, leg	1.04.08.03	2
125	X51 Wrench 17-19	1.16.02.08	1
126	X51L Wrench 19-22	1.16.02.09	1
127	X24-X32 Screwdriver	1.16.02.06	1
128	Lubricating oil	1.16.03.05	1
129	X24-X32 Manual	1.18.01.07	1

магазин БАШ МАЙСТОРА® професионални решения

X51L/81L Parts List

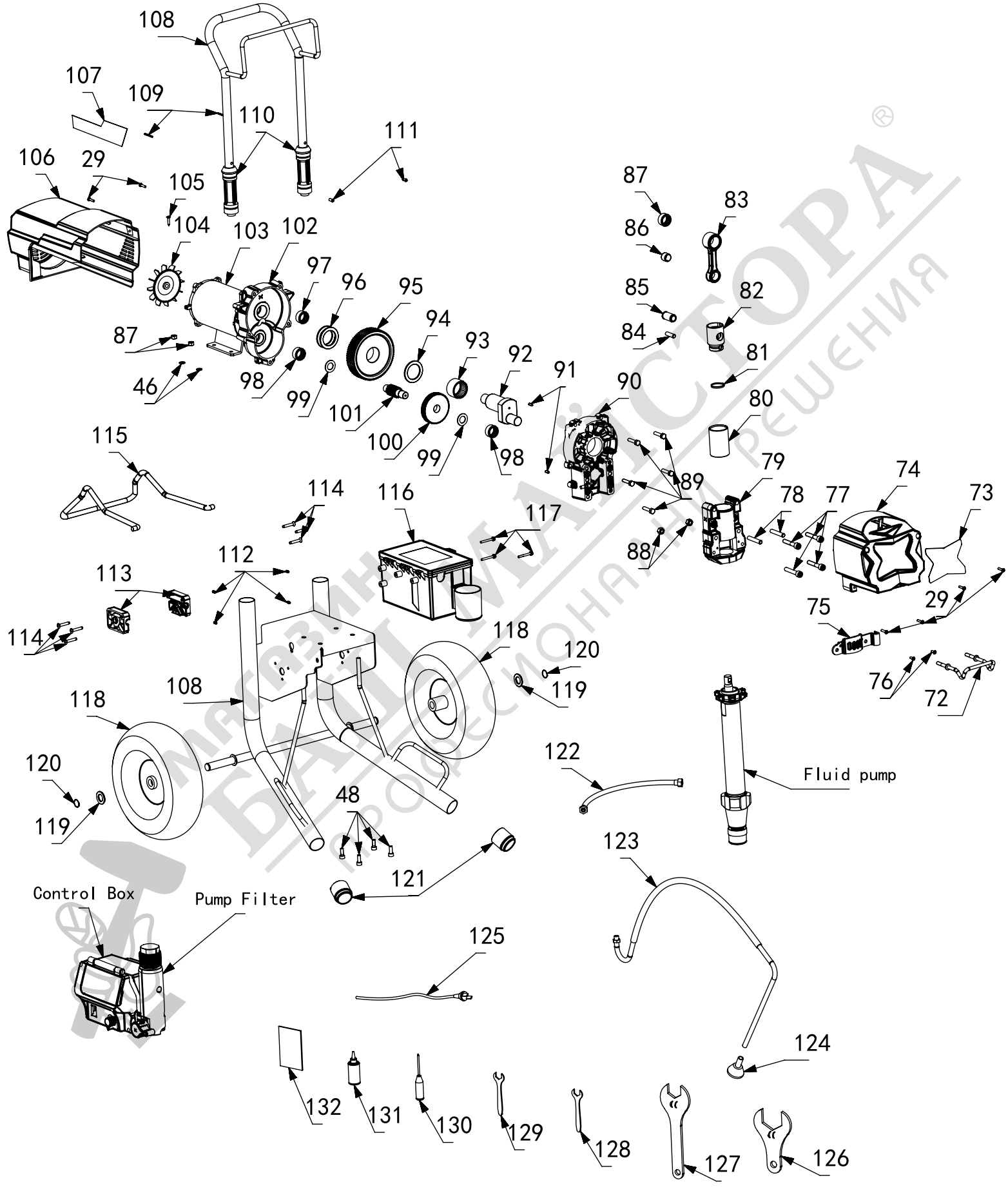

X51L/81L Fluid pumps

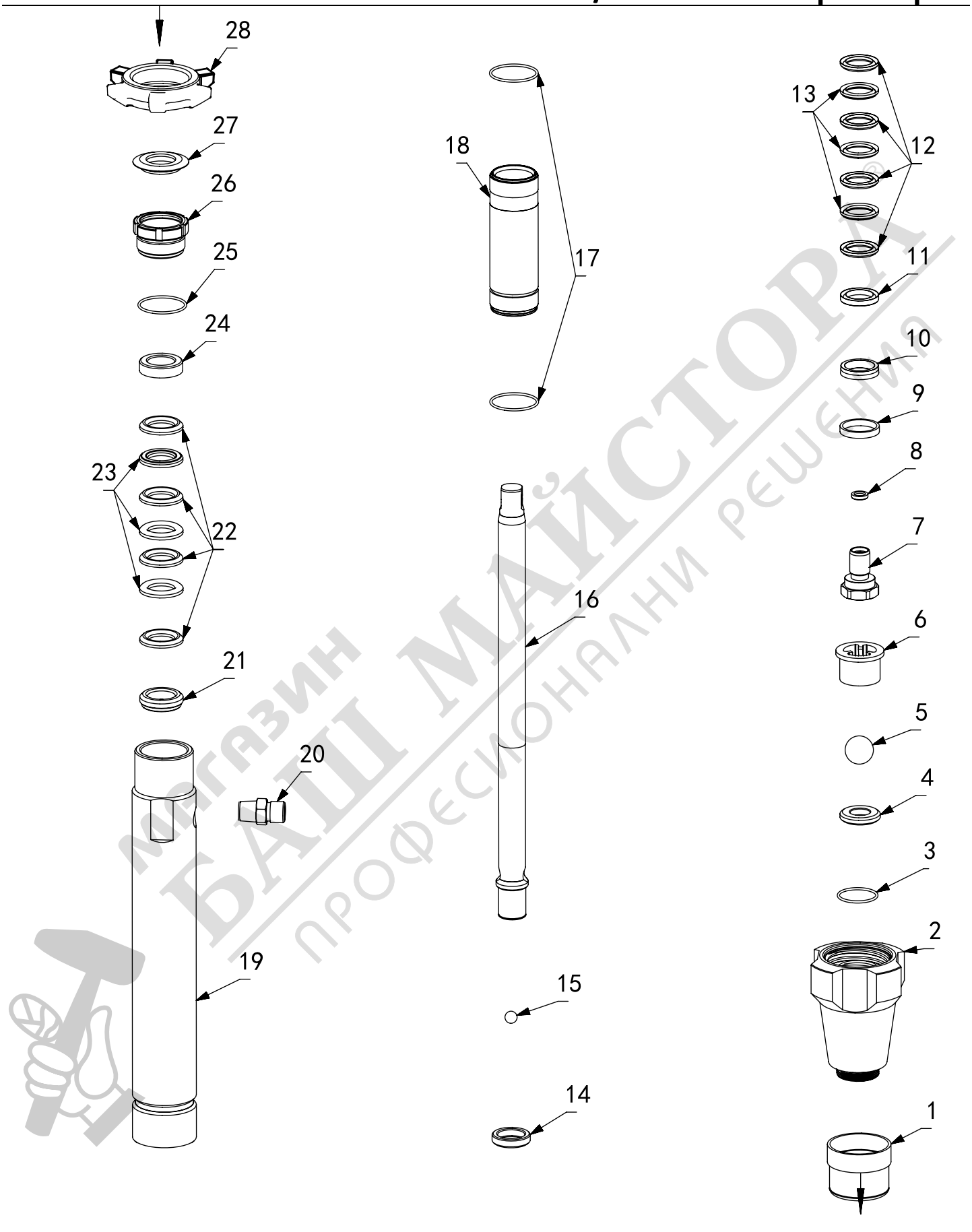

магазин БАШ МАЙСТОРА ПРОФЕСИОНАЛНИ РЕШЕНИЯ

X51L/81L Filter & Control box

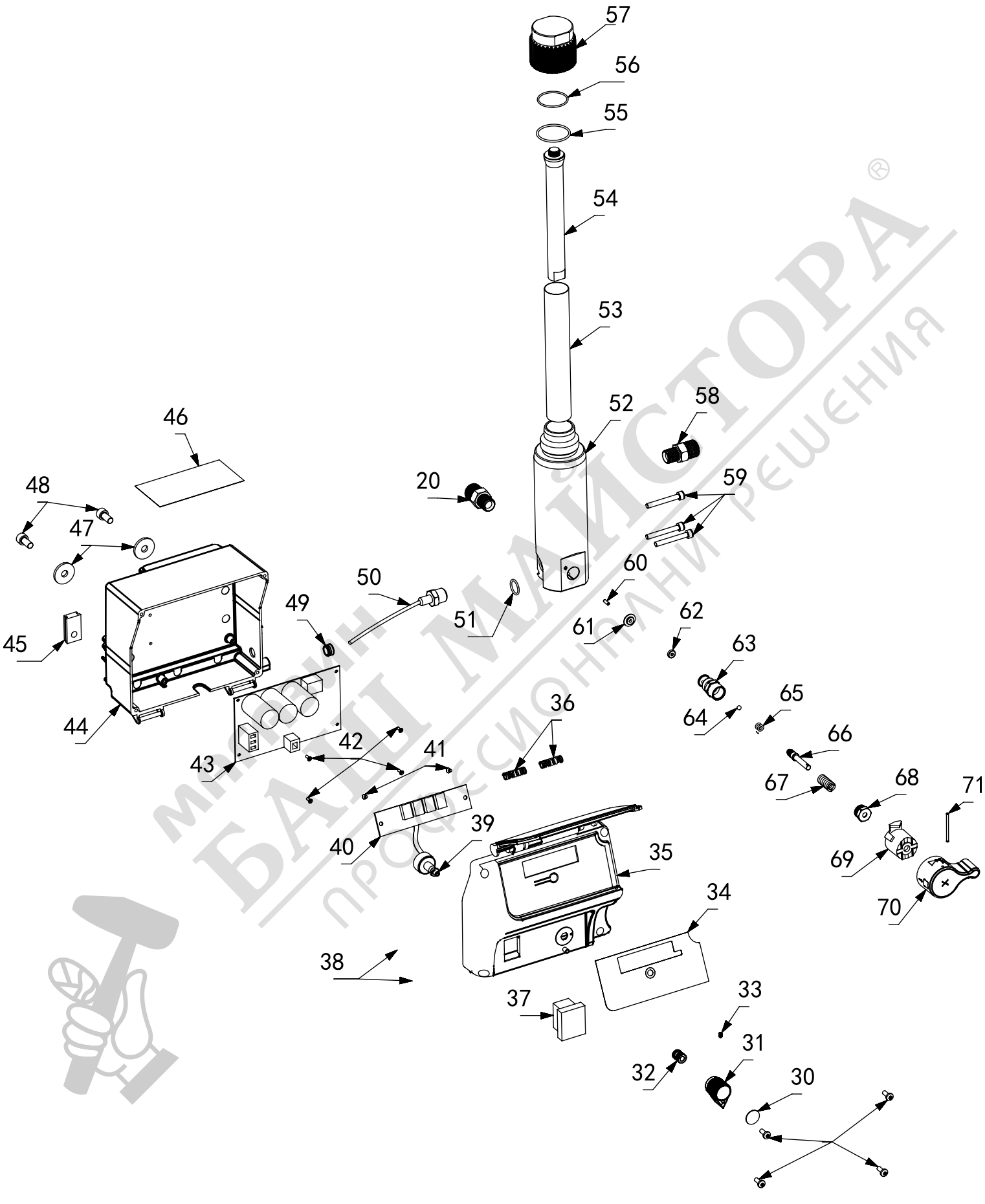

МАГАЗИН БАШ МАЙСТОРА® ПРОФЕСИОНАЛНИ РЕШЕНИЯ

No.	Description	Part No.	Qty
1	X32H-X51L Strainer	1.16.05.26	1
	X81L Strainer	1.16.05.29	1
2	X51L Valve, intake	1.06.03.09	1
	X81L Valve, intake	1.06.03.12	1
3	X51L O-ring	1.04.02.29	1
	X81L O-ring	1.04.02.25	1
4	X51L Seat, carbide	1.08.02.06	1
	X81L Seat, carbide	1.08.02.05	1
5	X51L Ball, inlet	1.09.01.06	1
	X81L Ball, inlet	1.09.01.07	1
6	X51L Guide, ball	1.06.04.04	1
	X81L Guide, ball	1.06.04.05	1
7	X51L Valve, piston	1.06.06.06	1
	X81L Valve, piston	1.06.06.07	1
8	X51L Seat, piston valve	1.08.01.06	1
	X81L Seat, piston valve	1.08.01.05	1
9	X81L Washer, backup	1.06.09.28	1
10	X51L Wiper, piston	1.04.02.31	1
	X81L Wiper, piston	1.04.02.32	1
11	X51L Gland, female, piston	1.06.09.09	1
	X81L Gland, female, piston	1.06.09.12	1
12	X51L V-packing, piston	1.04.02.22	4
	X81L V-packing, piston	1.04.02.33	4
13	X51L V-packing, leather, piston	1.05.01.22	3
	X81L V-packing, leather, piston	1.05.01.24	3
14	X51L Gland, male, piston	1.06.09.10	1
	X81L Gland, male, piston	1.06.09.13	1
15	X51L Ball, check	1.09.02.06	1
	X81L Ball, check	1.09.02.07	1
16	X51L Piston rod	1.06.05.07	1
	X81L Piston rod	1.06.05.08	1
17	X51L O-ring	1.04.02.25	2
	X81L O-ring	1.04.02.34	2
18	51L Sleeve, cylinder	1.06.02.05	1
	X81L Sleeve, cylinder	1.06.02.06	1
19	X51L Cylinder, pump	1.06.03.08	1
	X81L Cylinder, pump	1.06.03.11	1

No.	Description	Part No.	Qty
20	X51L Nipple, 3/8"x3/8"	1.06.07.09	2
	X81L Nipple, 3/8"x3/4"	1.06.07.18	2
21	X51L Gland, male, throat	1.06.09.08	1
	X81L Gland, male, throat	1.06.09.14	1
22	X51L V-packing, throat	1.04.02.21	4
	X81L V-packing, throat	1.04.02.33	4
23	X51L V-packing, theather, throat	1.05.01.21	3
	X81L V-packing, theather, throat	1.05.01.24	3
24	X51L Gland, female, throat	1.03.05.02	1
	X81L Gland, female, throat	1.03.05.03	1
25	X51L O-ring	1.05.01.18	1
	X81L O-ring	1.05.01.23	1
26	X51L Nut, packing	1.06.09.06	1
	X81L Nut, packing	1.06.09.25	1
27	X51L Button, plug	1.05.02.10	1
28	X51L Nut, retaining	1.01.06.20	1
	X81L Nut, retaining	1.01.06.29	1
29	Scew	1.01.01.11	10
30	Label, potentiometer	1.18.02.14	1
31	Knob, potentiometer	1.04.05.06	1
32	Insert, potentiometer	1.03.03.11	1
33	Fixing screw, potentiometer	1.01.01.52	1
34	X51L label, control box	1.18.02.23	1
35	X51L Box, controL	1.04.01.37	1
36	X51L Spring, control box	1.01.04.15	2
37	X51L ON/OFF switch	1.07.04.06	1
38	Power plug	1.07.01.20	2
39	X24-X81L Potentiomater	1.07.05.17	1
40	X51L X81L Board, Digital Display	1.07.05.11	1
41	STP2.9 Screw	1.01.01.46	2
42	Screw	1.01.01.06	4
43	X51L Control Board	1.07.05.15	1
	X81L Control Board	1.07.05.24	1
44	X51L Box, control	1.02.07.05	1
45	X51L Gasket, contro. box	1.05.02.14	1
46	X51L Label, control box	1.18.02.22	1
47	M8 Gasket	1.01.05.21	6

ПАЛИ МАЙСТОРА
магазин профессионалните инструменти

X51L/81L Parts List

48	Screw	1.01.01.45	6
49	Grommet, transducer	1.05.02.13	1
50	X24-X81L Transducer	1.07.05.10	1
51	Packing, O-ring	1.04.02.59	1
52	X51L Manifold	1.02.05.09	1
53	X51L Filter, fluid, 60mesh	1.16.05.27	1
	X81L Filter, fluid, 30mesh	1.16.05.28	1
54	X51L Insert, filter	1.04.08.15	1
55	X51L O-ring, manifold	1.04.02.25	1
56	X51L O-ring, cap, manifold	1.04.02.30	1
57	X51L Cap, manifold	1.02.05.02	1
58	X51L Nipple, 3/8"x3/8"	1.06.07.09	1
59	Screw	1.01.01.55	3
60	Pin, drain valve	1.01.04.14	1
61	Gasket, drain valve	1.04.02.54	1
62	X51L Seat, drain valve	1.08.03.02	1
63	X51L Valve, drain	1.06.06.09	1
64	X51L Ball, drain valve	1.09.03.02	1
65	X51L O-ring, drain valve	1.05.01.07	2
66	X51L Steam, drain valve	1.06.11.09	1
67	X51L Spring, drain valve	1.01.04.17	1
68	X51L Base, drain valve	1.01.06.23	1
69	X51L Base, valve	1.04.04.08	1
70	X51L Handle, valve, drain	1.04.04.07	1
71	X51L Pin, groove	1.06.11.08	1
72	X51L Handle	1.01.06.19	1
73	X51L Label, front	1.18.02.24	1
74	X51L Cover, front	1.04.01.34	1
75	X51L Cover, pump rod	1.04.08.14	1
76	Screw	1.01.01.37	2
77	Screw	1.01.01.36	4
78	X51L Pin	1.01.06.04	2
79	X51L Housing, bearing	1.02.08.12	1
	X81L Housing, bearing	1.02.08.13	1
80	X51L Sleeve, connecting rod	1.03.04.03	1
81	X51L Spring, sleeve	1.01.04.07	1

82	X51L Sleeve, connecting rod	1.01.10.08	1
	X81L Sleeve, connecting rod	1.01.10.09	1
83	X51L Rod, connecting	1.01.10.07	1
84	X51L Pin, straight	1.01.06.03	1
	X81L Pin, straight	1.01.06.28	1
85	X51L Pn, connecting rod	1.01.06.18	1
86	X51L Bushing, connecting rod	1.03.04.04	1
87	Bearing HK2530, connecting rod	1.01.14.14	1
88	Screw	1.01.01.34	6
89	Screw	1.01.01.35	5
90	X51L Housing, drive	1.02.08.06	1
91	X51L Pin, housing	1.06.11.07	2
92	X51L Eccentric shaft	1.01.06.05	1
93	Needle bearing BA2620ZOH	1.01.14.20	1
94	X51L Bearing, thrust	1.01.05.26	1
95	X51L GEAR, crankshaft	1.01.13.07	1
96	X51L Washer, thrust	1.01.05.25	2
97	Needle bearing SCE1616	1.01.14.17	1
98	Needle bearingNK1916	1.01.14.12	2
99	X51L Washer, gear, reducer	1.01.05.24	3
100	X51L Gear, reducer	1.01.13.06	1
101	X51L Shaft, gear	1.01.13.05	1
102	X51L Seat, drive housing	1.02.08.05	1
103	X51L Motor	1.07.03.24	1
	X81L Motor	1.07.03.26	1
104	X51L Fan, motor	1.04.01.33	1
105	Screw	1.01.01.47	1
106	X51L Shield, motor	1.04.01.35	1
107	X51L Label, side	1.18.02.25	1
	X81L Label, side	1.18.02.27	1
108	X51L Frame, cart	1.01.02.15	1
109	X51L Pin, spring straight	1.01.06.21	2
110	X51L Sleeve, cart	1.04.08.13	2
111	X32H/X51L Button, snap	1.01.04.21	2
112	Screw	1.01.01.44	4
113	X51L Block, support	1.04.08.16	2

BALL MAKTOR®
производство кремы

X51L/81L Parts List

114	M6 Screw	1.01.01.53	6
115	X51L Frame, support	1.01.02.16	1
116	X51L Box, tool	1.04.01.36	1
117	Screw	1.01.01.23	3
118	X51L Wheel	1.14.02.01	2
119	X51L Cap, hub	1.01.05.23	2
120	X51L Clip, retaining	1.01.04.18	2
121	X51L Cap, leg	1.04.08.12	2
122	X51L Hose	1.16.05.04	1
	X81L Hose	1.16.05.14	1
123	X51L Hose, drain	1.16.05.10	1
124	X51L Deflector, threaded	1.04.01.42	1
125	X51L Power plug (European plug)	1.07.02.16	1
126	Adjustable wrench	1.16.02.12	1
127	X51L djustable wrench	1.16.02.10	1
128	Wrench 17/19	1.16.02.08	1
129	Wrench 19/22	1.16.02.09	1
130	X51L Screwdriver	1.16.02.07	1
131	X51L Lubricating oil	1.16.03.05	1
132	X51L Manual	1.18.01.08	1

магазин БАЙ МАЙСТОРА® професионални решения