SL-1253N

Gebruiksaanwijzing
Manuel d'utilisation
Instructions for use
Betriebsanleitung
Instrucciones
Istruzioni per l'uso
Brugervejledning
Användningsinstruktioner
Bruksanvisning

Nederlands	4
Français	9
English	14
Deutsch	18
Español	23
Italiano	28
Dansk	32
Svenska	36
Norsk	40

CARAT

Due to continuous product development and technical improvements, technical information may be changed without prior notice.

PERSONAL SAFETY

Read all operating and safety instructions before using the machine. Follow the instructions strictly for your own safety.

MACHINE DATA

Type	SL-1253N
Rated power input	1700W
Protection class	2 / II
No-load speed	10.200 min^{-1}
Width across flats clamping bolt	13 mm
Arbor diameter	Ø 22,2 mm (7/8”)
Ø Diamond grinding wheels	Ø 125 mm
Slot depth	0 – 27 mm
Slot width	10 – 40 mm
Weight	4,5 kg

MAIN PARTS

The main parts are numbered identical to the graphic of the power tool at page 3 of this manual.

1. Guard and extraction hood
2. Cover
3. Inner guard
4. Vacuum hose
5. Vacuum connection
6. Auxiliary handle
7. ON/OFF-switch
8. Spindle lock button (won’t be used)
9. Mounting flange
10. Diamond grinding wheels
11. Spacers
12. Locking flange
13. Clamping bolt
14. Depth locking
15. Wedge
16. Wrench for locking bolt
17. Two-pin spanner for clamping nut

INTENDED USE

The machine is intended to grind slots, in conjunction with a dust-category M vacuum cleaner, in mineral materials such as reinforced concrete, brickwork and road surfaces, without the use of water.

POWER SUPPLY

The tool should be connected only to a power supply of the same voltage as indicated on the nameplate, and can only be operated on single-phase AC supply. The tool is double-insulated in accordance with European Standard and can therefore be used from non-grounded sockets.

DUST EXTRACTION

Dust released when processing (grinding of minerals) can be harmful to one’s health. Touching or breathing-in the dusts can cause allergic reactions and/or lead to respiratory infections of the user or bystanders.

- To achieve a high degree of dust extraction, use a dust category M vacuum cleaner for mineral dust together with this power tool.
- Provide good ventilation of the working place.
- It is recommended to wear a FFP2 filter class respirator.

Observe the relevant regulations in your country for the materials to be worked.

Please observe the following notes in order to reduce the dust emissions occurring while working.

- Only use combinations of diamond grinding wheels, concrete grinders with mounted guard and extraction hood as well as dust category M vacuum cleaners that are recommended by Carat. Other combinations can lead to insufficient dust collection and separation.
- Observe the operating instructions of the vacuum cleaner for maintenance and cleaning of the vacuum cleaner, including the filter. Empty dust collection containers immediately once full. Clean the filters of the vacuum cleaner regularly and always insert the filters completely into the vacuum cleaner.
- Only use vacuum hoses as intended by Carat. Do not manipulate the vacuum hose. When rocks or chunks of stone/masonry are drawn into the vacuum hose, cease work and clean the vacuum hose immediately. Prevent the vacuum hose from being bent or creased.
- Use the concrete grinder only as intended for.
- Only use tools that are in perfect condition. Decrease in work progress is noticeable whilst using worn tools.
- Observe the general requirements for construction sites.
- Provide for good ventilation.
- Ensure that the work area is free of obstructions. For longer grinding jobs, the vacuum cleaner must be able to move along freely and at the right time.
- Wear hearing protection, protective goggles, a dust mask and gloves as required. As dust mask, use at least a particle-filtering class FFP 2 half-mask.
- Use a suitable vacuum cleaner for cleaning the workplace. Prevent settled dust from being swirled up by sweeping.

ASSEMBLY INSTRUCTIONS

Pull the mains plug of the power tool from the socket, before any work on the machine itself!

It’s recommended to wear worker’s gloves while assembling or changing the diamond grinding wheels.

Diamond grinding wheels become very hot due operating. Don’t touch them until they have cooled down.

Diamond grinding wheels

This power tool is not intended to be used in combination with other tools than diamond grinding wheels. The guard doesn’t supply suitable protection for tools other than diamond grinding wheels.

The arbor of the diamond grinding wheels must fit the mounting flange. Do not increase the arbor of the diamond grinding wheels. Do not use reducers or adapters.

The permissible speed (rpm) of the diamond grinding wheels used must be at least the 10.200 min-1.

Always select a type of diamond grinding wheels suitable for the specific material to be grinded. We advise diamond grinding wheels from Carat. Observe the manual of the diamond grinding wheels.
Make sure the diamond grinding wheels are rotating in the correct direction. Verify the direction of the arrow on the diamond grinding wheels is corresponding the direction of the arrow on the power tool.

Always change the diamond grinding wheels as a couple. Use in a couple the same type of diamond grinding wheels.

Dismounting and mounting of the diamond grinding wheels
To change the diamond grinding wheels the guard and extraction hood must be swiveled out. Place the power tool on a firm surface.

Tighten the depth locking (at a random position) to avoid unexpected swiveling of the inner guard.

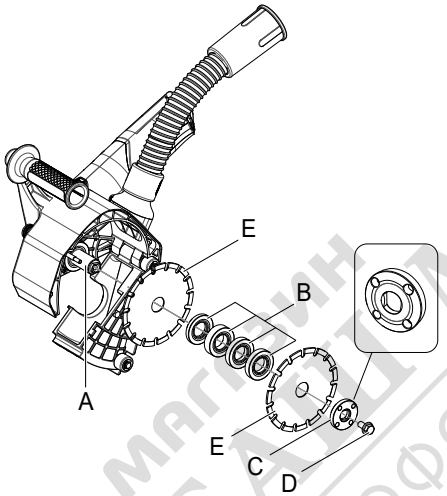

- Loosen the three cylindrical screws which mount the cover [2] on the guard and extraction hood [1] with aid of a screwdriver.
- Loosen the depth locking [14] while holding the cover.
- Remove the cover from the guard and extraction hood. Due removing the cover the inner guard will swivel further open.
- Block the locking flange (C) and loosen the clamping bolt (D) with aid of the wrench [16].
- Unscrew the locking bolt from the mounting flange (A).
- Remove the spacers (B) and the diamond grinding wheels (E).
- Clean the mounting flange and all parts to be (dis)mounted.

The slot width depends on the quantity spacers between the diamond grinding wheels and the width of the segments of the diamond grinding wheels.

With this power tool three different spacers are provided.

In the following table the amount and width of the spacers are given.

Spacer	Amount	Width (mm)
I	1	6
II	2	9
III	1	12

The slot widths in the subjoined table apply when by Carat advised diamond grinding wheels with a width of 2,4mm are mounted.

The following combinations of spacers between the diamond grinding wheels will result in the corresponding slot widths.

For example, when 1x spacer I and 2x spacer II is mounted this will result in a 28mm slot width (the various spacer widths + the width of diamond grinding wheels).

Combination of spacers			Slot width (mm)
I	II	III	
1			10
	1		13
		1	16
1	1		19
	2		22
	1	1	25
1	2		28
1	1	1	31
	2	1	34
1	2	1	40

Regardless of the requested slot width, ALL supplied spacers must be mounted. Otherwise, the diamond grinding wheels can become loose during operation and lead to injuries.

At least one spacer must be mounted between two diamond grinding wheels.
When mounting the diamond grinding wheels, make sure the direction of the arrow on the diamond grinding wheels matches the direction of the arrow on the guard and extraction hood (the arrow is stated on the cover).

- Mount the spacers and diamond grinding wheels in the requested order on the mounting flange.
- Mount the locking flange, with the bushing pointing the diamond grinding wheels, on the mounting flange.
- Screw the clamping bolt into the mounting flange.
- Block the locking flange and tighten the clamping bolt with aid of the wrench.
- Close the inner guard and place the cover on the guard and extraction hood. Mind the diamond grinding wheels to prevent injuries.
- Tighten the depth locking (at a random position).
- Tighten the three cylindrical screws of the cover with aid of a screwdriver.

магазин БАЙМАЙСТОРА професионални решения

After mounting the diamond grinding wheels and before switching on, check that the diamond grinding wheels are correctly mounted and that they can turn freely. Make sure that the diamond grinding wheels don't graze against the guard and extraction hood or other parts.

OPERATING INSTRUCTIONS

Verify the switch [8] actuates properly and returns to the 0-position when the rear of the switch lever is pressed, before plugging in the power tools.

Set grinding depth in advance

Pull the mains plug of the power tool from the socket, before any work on the machine itself!

- Loosen the depth locking [14] so it can move in its runway.
- Move the depth locking to its lowest position.
- Close the inner guard [3] until the diamond grinding wheels stick out the requested amount of millimeters (x) from the guard and extraction hood. By closing the inner guard the depth locking will move upwards. If the inner guard passes the requested position the depth locking must be moved down again. Ignoring this will result in a unrequested slot depth.
- Tighten the depth locking. The inner guard will swivel to its lowest position when unleashed.

The graduated scale on the cover of the guard and extraction hood is indicative and therefore not foreseen of a calibration. When the segments wear down this declines the grinding depth.

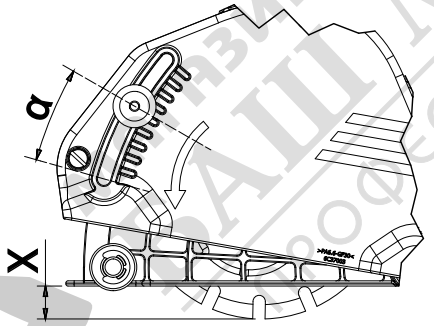

Usage

Connect the power tool to an power supply with the same current as stated on the nameplate.
Connect and switch on the dust extractor.

To start the power tool, slide the ON/OFF-switch [7] towards the front. For continuous operation, press the front of the switch to lock it.

To stop the power tool, press the rear of the switch so it returns to the OFF-position.

Check diamond grinding wheels before using. The diamond grinding wheels must be mounted properly and be able to move freely. Carry out a test run for at least one minute with no load. Do not use damaged, out-of-centre or vibrating diamond grinding wheels. Damaged diamond grinding wheels can burst and cause injuries.

When operating the power tool, hold it firmly with both hands.

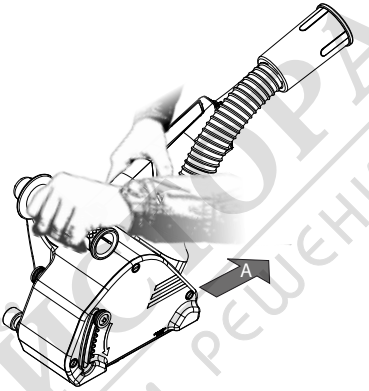

- Set the requested grinding depth. See section "Set grinding depth in advance". To compensate inaccuracies that occur when breaking the fin away, the grinding depth must be set approx. 3mm deeper than the requested slot depth.
- Place the power tool with the rollers on the surface to be grinded.
- Switch the power tool on.
- Slowly bring the grinding unit into the material.
- Move the power tool applying a moderate feed, suited to the material being grinded.
- The power tool must be guided in a up grinding motion. Otherwise the danger exists that the grinding unit is pushed uncontrolled out of the cut. Guide the power tool in direction of the arrow (A).
- Vertical slots can easily be grinded by pulling the power tool from top to bottom.
- At the ending of the grinding procedure swivel the grinding unit out of the material, when the power tool is still running.
- Switch the power tool off.

Do not slow down freewheeling diamond grinding wheels applying sideward pressure.

Diamond grinding wheels may become very hot while operating. Don't touch the diamond grinding wheels before they cooled down.

МАГАЗИН ПРОФЕССИОНАЛНИ РЕШЕНИЯ

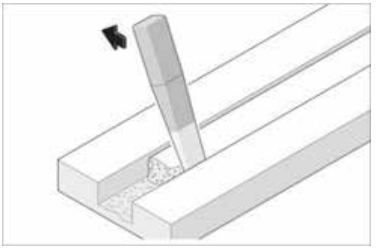

Remove the remaining fin of the material with the wedge [15].

Curved cuts are not possible, the diamond grinding wheels will jam in the material.

When breaking through walls, e.g. with a rotary hammer, most of the chipping-off of the surface material can be avoided by first grinding a slot with maximum grinding depth.

For grinding especially hard material, e.g. concrete with high pebble content, the diamond grinding wheels can overheat and get damaged. This is clearly indicated by circular sparking, rotating with the diamond grinding wheels. When this occurs interrupt the grinding process and allow the diamond grinding wheels to cool down. Run the power tool for a short time at no-load speed.

Working advice

- Be careful grinding slots in structural walls. See section “Information on Structures”.
- Do not strain the power tool so heavily that it comes to a standstill.
- Firmly support the work piece, secured against sliding, e.g. with clamping devices.
- The power tool may only be used for grinding without the use of water.
- Noticeable decreasing work progress and circular sparking indicates the diamond grinding wheels are become dull. Briefly grinding a abrasive material (e.g. limestone brick) can sharpen the wheels again.(zoals kalkzandsteen).

Information on Structures

Slots in structural walls are subject to the standard DIN 1053 part 1 or national-specific regulations. These regulations must be observed. Consult the responsible structural engineer, architect or construction supervisor before starting.

The permitted slot depth and width depends on the slot length, wall thickness and the used construction materials.

EMISSION

Vibration emission value ah = 6 m/s².
Uncertainty K < 1.5 m/s².

Typically the A-weighted noise levels of the product are: Sound pressure level 93 dB(A); Sound power level 104 dB(A). Uncertainty K=3 dB.

Measured values determined according to EN 62841.

ENVIRONMENTAL PROTECTION

According to the European regulation 2012/19/EU, CARAT is responsible to recycle old electric drill motors. You are therefore requested to return old CARAT electric drill motors to your local reseller.

SERVICE AND MAINTENANCE

Pull the mains plug of the power tool from the socket, before any work on the machine itself.

For safe and proper working, always keep the machine and ventilation slots clean.

Dismount and clean the diamond grinding wheels and spacers after finishing. Clean the guard and extraction hood.

WARRANTY

For the machine, a guarantee period of 12 months applies from the moment of delivery. Guarantee claims must be shown by submission of purchase invoice. The guarantee includes the repair of defects which have occurred and can be linked by to material or manufacturing faults.

Not covered by guarantee:

- Defects or damages which have arisen due to incorrect use or connection.
- Machine overload.
- When maintenance has been carried out incorrectly or badly.
- Information in the manual has not been properly followed.
- The machine is used by unqualified persons.
- If the machine is used for purposes for which it is unsuitable.
- The machine is repaired using unoriginal parts.
- If the machine encryption is damaged or deleted.
- If defects are caused by fire, damp and/or transport.

DECLARATION OF CONFORMITY

We declare under our sole responsibility that this product is in conformity with the following standards or standardized documents:
EN 62841-1; EN 61000; 2006/42/EC; 2014/30/EC; 2011/65/EU

Director: C.J. van Beek

16-09-2022
CARAT Nederland B.V.
Nikkelstraat 18, 4823 AB Breda, the Netherlands

ENGLISH